60cm Series 9 Integrated Wine Cabinet

Integrated

Designed for wine lovers, this under-counter wine cabinet seamlessly blends into any space of the evolving home. With dual temperature zones and specialised modes, it provides optimal conditions for all wine types.

- With two independent temperature zones to cater for different wine varieties
- Four specialised wine modes for Red, White, Sparkling, and Cellar-stored wines
- Accommodates up to 35 bottles, providing ample space for a diverse collection
- Designed to fit flush, with 4mm gaps and no visible hinges or grilles

DIMENSIONS

Height	864 mm
Width	592 mm
Depth	579 mm

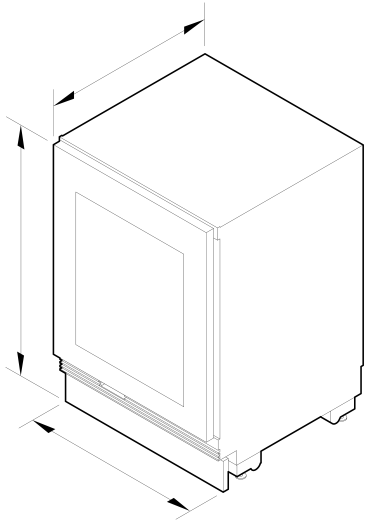

FEATURES & BENEFITS

Complete Design Freedom

This sleek under-counter wine cabinet enhances any space, from kitchens to home bars, rumpus rooms to home cinemas. Compact and stylish, it is a sophisticated, space-efficient solution for wine enthusiasts looking to add elegance and accessibility to their home. Pairs perfectly with our Beverage Centre to create an entertainer's dream set-up.

Optimal Wine Care

To provide the perfect storage environment for your wine collection, this cabinet has been engineered to maintain a consistent temperature across two independently-controlled zones. An activated carbon filter in each compartment clears the air of pollutants, ensuring your wine is perfectly preserved.

Precise Temperature Control

Four tailored wine modes offer optimal temperatures for serving and cellaring different types of wine: Red, White, Sparkling, and Cellar. These modes ensure each variety can receive the care it needs to be enjoyed at its best. Manual temperature adjustments are possible in 0.5°C increments between 6-18°C.

Reduced Vibration

Vibration can dull flavour and cause other unwanted issues in wine. This cabinet features a quiet, low-vibration compressor, full-extension slides with white oak shelving, and other strategically chosen absorptive materials to help carefully maintain the flavour profile of every drop.

Customisable Lighting

The tinted glass door effectively filters out UV light, allowing your wine to mature naturally. LED lighting offers four beautiful illumination options to highlight your collection, from a candlelit ambience to brilliant display lighting.

Seamless Fit

These panel-ready models are designed to fit flush, with only 4mm gaps between the wine cabinet and surrounding cabinetry, and no visible hinges or grilles. The tinted glass door puts your collection proudly on display, or hide your collection seamlessly behind cabinetry with our solid door model.

Simple Installation

Our Integrated products are easy to install, whether you are renovating your kitchen or designing a new one. Adjustable front and rear feet allow for uneven floors alongside adjustable door panels that can be customised to match your kitchen. These models are designed to easily slide into place under your counter – a perfect fit for European-design kitchens.

SPECIFICATIONS

Accessories (included)

Hinge change (from right hinge to left hinge)	•

Accessories (sold separately)

Door panel stainless steel	Left (Framed) RD6009VL, Right (Framed) RD6009VR
Handle kit Classic	AHCLRD09
Handle kit Contemporary round	AHSRD09
Handle kit Contemporary square fine, aluminium	AHD5RD09
Handle kit Contemporary square fine, black	AHD5RD09B
Handle kit Contemporary square, aluminium	AHD7RD09X
Handle kit Minimal rectangular, black	AHM1RD09B
Handle kit Professional round flush	AHP3RD09
Wine display label Kit (14 labels with white pencil)	ALV14
Wine filter odour kit	863974

Capacity

Number of bottles	35

Connected Features

Alerts and notifications	•
Education and onboarding	•
Remote operation	•
Software updates	•

Consumption

Energy consumption	71kWh/year

Features

Air filter lower compartment	•
Air filter upper compartment	•
Door alarm	•
Full extension storage racks	5
LED lighting	•
Low vibration compressor	•
Removable solid oak shelves	5
Smart appliance	•
SmartTouch interface at counter height	•
Soft-mounted wine racks	•
Telescopic slide out oak shelves	5
UV tempered glass door	•

Performance

ActiveSmart™ wine care	•
Air circulation fan	•
Door opening	right hand hinge
Dual evaporator	•
Dual Zone	•
Noise emissions	34 dBA
Sabbath mode	•
Temperature range	6-18 degrees Celcius
Variable temperature zones	2
Variable wine modes	Red

Power requirements

Rated current	10 A
Supply frequency	50 Hz
Supply voltage	220-240 V

Product dimensions

Depth	579 mm
Height	864 mm
Width	592 mm

SKU	26700

The product dimensions and specifications in this page apply to the specific product and model. Under our policy of continuous improvement, these dimensions and specifications may change at any time. You should therefore check with Fisher & Paykel's Customer Care Centre to ensure this page correctly describes the model currently available. © Fisher & Paykel Appliances Ltd 2020

Other product downloads available at fisherpaykel.com

- DXF
- DXF
- DWG
- Installation Guide (English)
- Installation Guide (English)
- Planning Guide - Assisted Opening Accessory (English)
- Planning Guide (English)
- Revit
- Rhino
- SketchUp
- User Guide (English)

Where applicable:

All appliances use energy, and energy usage typically generates carbon emissions. **Fisher & Paykel Appliances' In-use Energy Carbon Emissions Estimate** indicates carbon emissions from a product's in-use energy. This is calculated either annually or per cycle, using the product's market-specific energy label energy consumption data multiplied by the carbon emissions factor for energy in your country or region.

Our In-use Energy Carbon Emissions Estimate is designed to assist customers in making informed purchasing decisions when comparing different Fisher & Paykel products. For example, a heat pump dryer typically has a lower In-use Energy Carbon Emissions Estimate than a vented dryer.

24/7

A PEACE OF MIND SALE
24 Hours 7 Days a Week Customer Support

T 0800 372 273 Wwww.fisherpaykel.com