487L Series 7 French Door Refrigerator Freezer, Ice & Water

Series 7 | Contemporary

Stainless Steel | French hinge



You'll have plenty of flexible storage space in this striking, large capacity French Door refrigerator freezer.

- ActiveSmart™ technology helps keep food fresher for longer by constantly maintaining the ideal temperature.
- Door water dispenser and internal ice maker
- Spacious bottom freezer with full extension drawer gives easy access to frozen goods.

DIMENSIONS

Height	1715 mm
Width	790 mm
Depth	695 mm

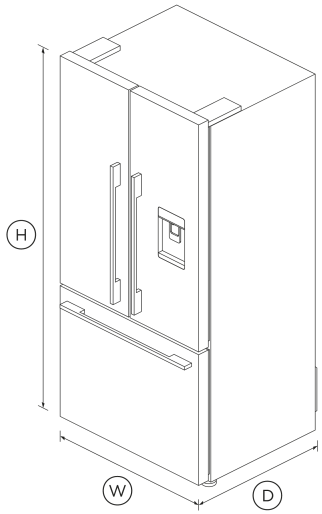

FEATURES & BENEFITS

ActiveSmart™ Foodcare

ActiveSmart™ Foodcare learns how you live. It's technology which understands how you use your refrigerator and adjusts temperature, airflow and humidity inside to help keep food fresher for longer.

Complementary design

With their premium handle styling and stainless steel finish, our refrigerators are designed to match the rest of Fisher & Paykel's kitchen appliance family.

Simple Storage

This refrigerator is designed to make it simple for you to store, access and remove food. Storage bins give you full access inside when they're pulled open and can be easily removed to clean. Our flexible shelving also gives you more storage options.

Easy Cleaning

No more permanent dirty marks with our EZKleen feature for stainless steel fridges. Anti-fingerprint coating means you simply wipe clean any marks. Spill-safe secure glass shelves easily capture any drips or leaks.

Ice Maker

Fresh ice is always available for you in a dedicated freezer bin. Simply turn it off to free up freezer space, or during busy times you can boost ice production by up to 30%.

Water On Tap

The slimline dispenser makes it easy to fill almost any sized jug or vessel with cool filtered water and doesn't take up any storage space in your fridge.

Design Quality

Our fridges are designed and built using quality materials. We use real stainless steel on our fridges and solid glass for shelving.

SPECIFICATIONS

Accessories (sold separately)

Water filter replacement	847200 - FWC3

Capacity

Total gross capacity	519 L
Volume	487 L
Volume freezer	142 L
Volume refrigerator	345 L

Connected Features

Cyber security updates until	04 / 03 / 2028

Consumption

Energy rating	3 star (IEC - 2015), 3.5 star (AS/NZS - 2009)
Energy usage	429kWh/year (IEC 62552- 2015), 414kWh/year (AS/NZS 4474.2:2009)
In-use energy carbon emissions estimate	261.8kgCO2e/year (IEC 62552- 2015), 252.6kgCO2e/year (AS/NZS 4474.2:2009)

Features

Adjustable glass shelves	3
Adjustable half width door shelves	4
Covered door shelves	2
Door alarm	•
Front levelling feet	•
Full extension runners	•
Full width door shelves	2
LED lighting	•
Rear rollers	•
Single bottle holders	4
Smart appliance	•
SmartTouch control panel	•
Ultra slim water dispenser	•

Freezer Features

Automatic ice maker	•
Bottle chill	•
Fast freeze	•
Freezer bins	3
Ice bin and scoop	•
Ice Boost	•

Performance

ActiveSmart™ Foodcare	•
Adaptive defrost	•
Frost free	•
Frost free freezer	•
Humidity control system	•
Inverter controlled compressor	•
R600a refrigerant	•

Power requirements

Rated current	10 A
Supply frequency	50 Hz
Supply voltage	230 V

Product dimensions

Depth	695 mm
Depth (including handles)	735 mm
Height	1715 mm
Height to top of cabinet	1715 mm
Minimum air clearance - each side	20 mm
Minimum air clearance - on top	50 mm
Width	790 mm

SKU	26409

The product dimensions and specifications in this page apply to the specific product and model. Under our policy of continuous improvement, these dimensions and specifications may change at any time. You should therefore check with Fisher & Paykel's Customer Care Centre to ensure this page correctly describes the model currently available. © Fisher & Paykel Appliances Ltd 2020

Other product downloads available at fisherpaykel.com

- DXF
- Data Sheet (English)
- DWG
- Energy Label
- Water Filter Replacement Instructions - Parts 847200 and 847201 (English)
- Installation Guide (English)
- User Guide (English)
- Installation & User Guide (English)

Where applicable:

All appliances use energy, and energy usage typically generates carbon emissions. **Fisher & Paykel Appliances' In-use Energy Carbon Emissions Estimate** indicates carbon emissions from a product's in-use energy. This is calculated either annually or per cycle, using the product's market-specific energy label energy consumption data multiplied by the carbon emissions factor for energy in your country or region.

Our In-use Energy Carbon Emissions Estimate is designed to assist customers in making informed purchasing decisions when comparing different Fisher & Paykel products. For example, a heat pump dryer typically has a lower In-use Energy Carbon Emissions Estimate than a vented dryer.

24/7

A PEACE OF MIND SALE
24 Hours 7 Days a Week Customer Support
T 1300 650 590 Wwww.fisherpaykel.com