Freestanding Refrigerator Freezer, 63.5cm, 364L

Series 5 | Contemporary

Stainless Steel | Right Hinge

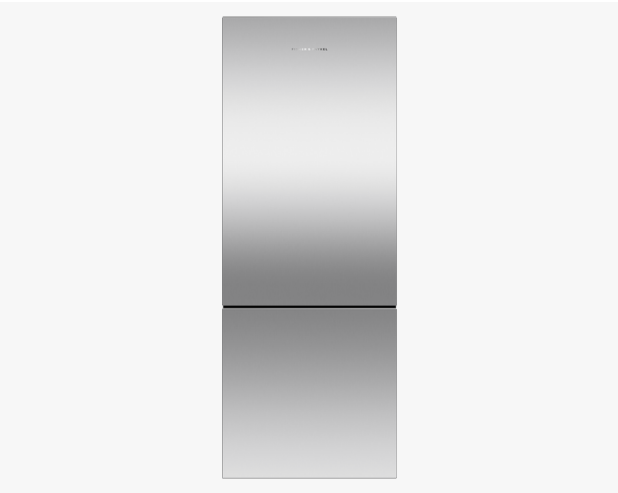

Compact and stylish in stainless steel, with concealed handles and generous storage for your chilled and frozen food.

- ActiveSmart™ technology helps keep food fresher for longer by constantly maintaining the ideal temperature
- Spacious bottom freezer with full extension drawer gives easy access to frozen goods
- Choose which side you'd like your door hinge on to suit your kitchen layout

DIMENSIONS

Height	**1720mm**
Width	**635mm**
Depth	**695mm**

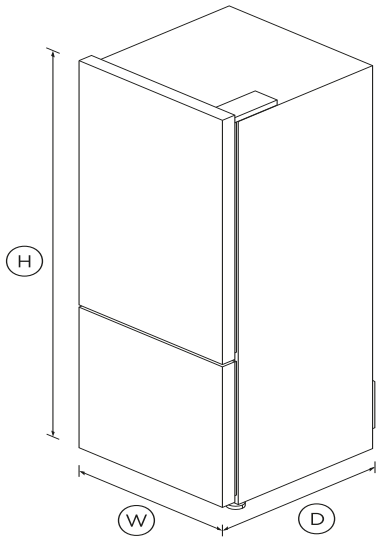

FEATURES & BENEFITS

ActiveSmart™ Foodcare

Every time you open your refrigerator, the temperature around your food changes. ActiveSmart™ foodcare adjusts airflow to create a stable temperature, helping your food stay fresher for longer.

Humidity control

Your fruit and veges need different environments. The humidity control slides in each storage bin create a perfect microclimate for each, which helps keep them fresher for longer.

Easy cleaning

No more permanent dirty marks with our EZKleen feature for stainless steel refrigerators. Anti-fingerprint coating means you simply wipe clean any marks. Spill-safe secure glass shelves easily capture any drips or leaks.

Design quality

Our refrigerators are designed and built using quality materials. We use real stainless steel, and solid glass for shelving.

Clever energy

Your refrigerator adapts to daily use by cooling and defrosting only when needed. This means it uses only the energy it needs without compromising on food care.

Simple storage

This refrigerator is designed to make it simple for you to store, access and remove food. Storage bins give you full access inside when they're pulled open and can be easily removed to clean. Our flexible shelving also gives you more storage options.

SPECIFICATIONS

Capacity

Total net volume	**363L**

Consumption

Energy rating	**1 tick**
Energy rating	**1**
Energy usage	**460kWh/year**

Features

Adjustable door shelves	**4**
Adjustable glass shelves	**3**
Covered door shelves	**2**
Door alarm	**•**

Front levelling feet	•
Fruit and vegetable bins	2
Full extension runners	•
LED lighting	•
Rear rollers	•
SmartTouch control panel	•
Spill proof removable bins	•
Stackable bottle holders	2

Freezer Features

Door alarm	•
Fast freeze	•
Large plastic bins	•
Slide Out Pastry Tray	•

Performance

ActiveSmart™ Foodcare	•
ActiveSmart™ technology	•
Adaptive defrost	•
Frost free	•
Frost free freezer	•
Inverter controlled compressor	•
R600a refrigerant	•

Product dimensions

Depth	**695mm**
Height	**1720mm**
Height to top of cabinet	**1698mm**
Height to top of door	**1720mm**
Width	**635mm**

Warranty

Parts and labour	**2 years**
Sealed system parts only	**5 years**

SKU	25567

The product dimensions and specifications in this page apply to the specific product and model. Under our policy of continuous improvement, these dimensions and specifications may change at any time. You should therefore check with Fisher & Paykel's Customer Care Centre to ensure this page correctly describes the model currently available. ? Fisher & Paykel Appliances Ltd 2020

Other product downloads available at fisherpaykel.com

- User Guide
- User Guide
- Service & Warranty
- Install Guide - Water Filter Replacement
- Data Sheet Freestanding Refrigerator Freezer

24/7

A PEACE OF MIND SALE

24 Hours 7 Days a Week Customer Support

T +65 6741 0777 **W**www.fisherpaykel.com