10kg Series 7 Contemporary Heat Pump Dryer, Woolmark Black

Series 7 | Heat Pump

White



An advanced Heat Pump Dryer where intelligent sensing meets delicate care. The vibrant 5” touchscreen controls and flexible convenience ensure every cycle is effective, gentle and reliable.

- Advanced care for 7 fibre types, including ultra-delicate Silk and Down
- Vibrant 5” touchscreen makes cycle selection simple and intuitive
- 3D Active Sense detects moisture deep into the load, even in bulky items or large loads
- Connect SmartHQ™ for notifications, guides and extra functions

DIMENSIONS

Height	850 mm
Width	602 mm
Depth	682 mm

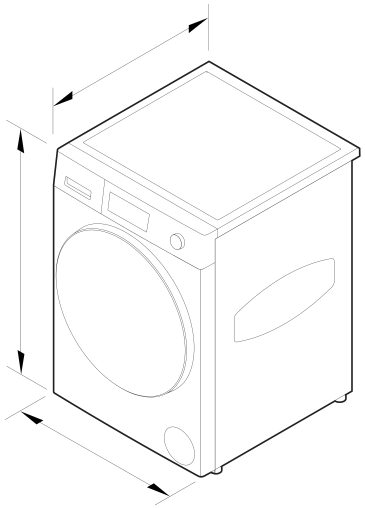

FEATURES & BENEFITS

ADVANCED CARE FOR DELICATES

Fisher & Paykel Series 7 Dryers make caring for your delicate garments effortless with a full-colour 5” touchscreen guiding every wash. Gentle Heat Pump technology dries at lower temperatures to protect fibres and reduce energy use. Each fibre’s molecular structure affects how moisture moves and evaporates, so Fibre-Led cycles including soft Silk, delicate Down and Woolmark Black certified Wool, are precisely tuned to the ideal temperature and duration, helping preserve softness, shape and longevity.

INTELLIGENT HEAT PUMP TECHNOLOGY

Our Intelligent Temperature System with Heat Pump Technology provides gentle care for Silk, which is most delicate when wet as water weakens the bonds holding its fibres together. Our variable speed compressor and Ultra Delicate Item Type reduce strain on these fibres, using multi-directional drum movements and low-temperature drying at precisely 40C to dry perfectly while preserving Silk’s softness, smoothness and natural sheen.

ADVANCED MOISTURE SENSING

Retain the softness, loft, and warmth of Down jackets with 3D Active Sense. By sensing moisture both on the surface and inside the load, the cycle is adjusted for gentle, even drying. Jackets dry with up to 17% more volume than air drying, protecting fine protein fibres from heat and friction while preserving structure and lasting warmth.

STEAM REFRESH

Gently reduce wrinkles and odours between washes with Steam Refresh. Using just enough moisture and the perfect balance of gentle heat and movement, Steam Refresh revives Silk garments without fully saturating them, helping prevent fibre swelling that can lead to fuzzing or pilling. Garments come out dry, refreshed and ready to wear, keeping Silk looking smooth and luxurious between washes.

PROTECT SILK FROM TANGLING

Protect the natural sheen of delicate Silk with TangleProtect. Silk cycles use alternating drum motions and tailored tumble patterns to gently care for fibres at their most fragile, reducing strain and friction. The result is Silk that stays smooth, soft and luxuriously lustrous after every dry.

GENTLE DRYING FOR WOOL

Woolmark Black certified cycles provide specialist drying for machine-washable Wool without shrinking or stretching. Our precisely tuned cycles protect Wool fibres as they dry, preventing heat or movement from altering their shape, while preserving the natural structure, softness, and fit of every garment.

PRECISION IN EVERY DETAIL

Our most perfect pair yet, reimagined for modern living. With a single 5" touchscreen, angled and streamlined for effortless cycle control, plus a newly positioned lint filter on the dryer, it offers a seamless fabric care experience, elevated beyond the utility space. Designed to complement one another in both form and function, our Front Loader Washers and Heat Pump Dryers feature refined materials, large doors and complementary cycles that work in harmony to care for a wide range of fibres.

SPECIFICATIONS

Accessories (included)

Drying rack	•

Capacity

Total capacity	10 kg

Connected Features

Alerts and notifications	•
Education and onboarding	•
Monitoring	•
Remote operation	•
Software updates	•

Consumption

Energy rating	9 star
Energy usage	113kWh/year
In-use energy carbon emissions estimate	10.2kgCO2e/year

Controls

Adjustable alert beeps	•
Beeps on/off function	•
Interface type	5" touchscreen
Screen brightness settings	•

Features

Clean condenser filter reminder	•
Clean door lint filter reminder	•
Crease Free	•
Drain Hose	•
Drum light	•
Easy access lint filter	•
Easy clean condenser filter	•
End of cycle signal	•
Favourite cycle	Multiple
Front and back levelling feet	•
Iron ready alert	•
Keylock	•
No external venting	•
Removable water tank	•
Reversible door	•
Smart appliance	•
Stainless steel drum	•
Water tank full indicator	•
Woolmark certified	Woolmark Black

Performance

3D sensing technology	•
Auto sensing	•
Compressor type	Variable speed
Delay start	•
Dryness settings	4
Heat pump technology	•
Refrigerant type	R290
Reverse tumbling	Full reverse tumbling
TangleProtect	•
Time dry	•

Product dimensions

Depth	682 mm
Height	850 mm
Width	602 mm

SKU	93308

The product dimensions and specifications in this page apply to the specific product and model. Under our policy of continuous improvement, these dimensions and specifications may change at any time. You should therefore check with Fisher & Paykel's Customer Care Centre to ensure this page correctly describes the model currently available. © Fisher & Paykel Appliances Ltd 2020

Other product downloads available at fisherpaykel.com

- DWG
- DXF
- Energy Label
- Installation Guide - Dryer (English)
- Installation Guide - Side by Side (English)
- Installation Guide - Stacked (English)
- Performance Guide (English)
- Planning Guide (English)
- Revit
- Rhino
- Introducing Fabric Care Solutions (English)
- Sketchup

User Guide (English)

Where applicable:

All appliances use energy, and energy usage typically generates carbon emissions. **Fisher & Paykel Appliances' In-use Energy Carbon Emissions Estimate** indicates carbon emissions from a product's in-use energy. This is calculated either annually or per cycle, using the product's market-specific energy label energy consumption data multiplied by the carbon emissions factor for energy in your country or region.

Our In-use Energy Carbon Emissions Estimate is designed to assist customers in making informed purchasing decisions when comparing different Fisher & Paykel products. For example, a heat pump dryer typically has a lower In-use Energy Carbon Emissions Estimate than a vented dryer.



A PEACE OF MIND SALE
24 Hours 7 Days a Week Customer Support

T 0800 372 273 **W**www.fisherpaykel.com