24" Series 11 Minimal Combi-Steam Oven

Series 11 | Minimal

Black Glass



This Minimal style oven has 23 functions with additional oven accessories to effortlessly create healthy and delicious dishes.

- With steam-only cooking functions, convection-only, or a combination of both
- Designed to match companion products such as Vacuum Seal Drawers
- Guided touchscreen cooking makes it simple to cook by food, function or recipe

DIMENSIONS

Height	23 9/16 "
Width	23 7/16 "
Depth	22 1/4 "

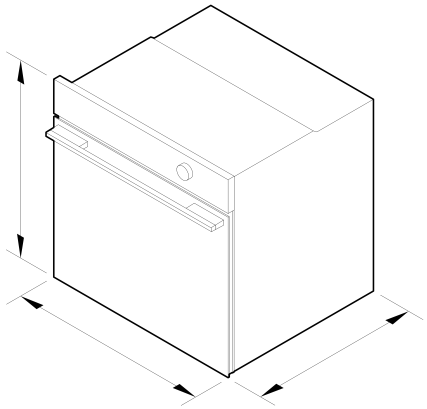

FEATURES & BENEFITS

From Steam To Sous Vide

Fine amounts of steam are released with accuracy and precision at a range of temperatures to ensure food is cooked gently and evenly. Perfect for entertaining, you can sous vide proteins such as steak and salmon before guests arrive, and simply sear when ready to serve. The flexibility of timing and accuracy of temperature control helps to ensure perfect, predictable results every time.

Gentle And Healthy

Steam functions allow you to cook food in its own juices to retain nutrients, moisture and flavor. With five steam-only cooking functions including Sous Vide, plus four combi-steam functions, this oven lets you enjoy the benefits of flavorful and healthy restaurant-quality meals at home.

Multi-Function Flexibility

A true multi-function oven, where the advantages of steam and convection cooking can be explored in full. You have the freedom to choose – whether it's dry heat, moist heat, or a combination of the two, each cooking method creates a unique result. Purchase our Wireless Temperature Sensor accessory and precisely monitor cooking in real time (accessory sold separately).

Cook With Confidence

Using the large 5" touchscreen interface, you can cook with a favorite method, a hero ingredient, or a go-to cooking function or recipe. Your oven can guide you through the steps, or change the temperature and heat type automatically, depending on your selection.

Reheat And Restore

Reduce household food waste by reheating foods with steam, which helps to regenerate moisture levels and ensure meals come out fresh and delicious. Use Steam Regenerate to reheat leftover meals such as roasts and risotto, while Crisp Regenerate is perfect for refreshing pastries, bread and pizza.

Complementary Design

Designed to blend seamlessly into the kitchen, this Minimal style oven features subtle textural and tonal contrasts. Available in a sleek black finish to support a considered kitchen design. Pair with a Vacuum Seal Drawer for the ultimate kitchen solution.

Exceptional Convection Performance

AeroTech™ circulates heat evenly for a consistent temperature throughout the cavity, while ActiveVent technology ensures optimized moisture levels when using convection functions. Achieve perfect results even when you're using multiple shelves.

SPECIFICATIONS

Accessories (included)

Broil grid	1
Broil pan	1
Broil rack	1
Chromed shelf runners	•

Descale solution	2 sachets, Part 580925
Full extension sliding shelves	2 sets
Large steam dish	1
Perforated large steam dish	1
Perforated small steam dish	1
Step down wire shelf	1
Wired temperature sensor	1

Capacity

Shelf positions	6
Total capacity	3 cu ft
Usable capacity	2.5 cu ft

Cleaning

Acid resistant graphite enamel	•
Descale cycle	•
Drying cycle	•
Removable oven door	•
Removable oven door inner glass	•
Removable side ladders	•
Removable water tank	•
Steam clean (oven)	•

Consumption

Energy usage	236kWh/year
In-use energy carbon emissions estimate	29.9kgCO2e/year

Controls

Adjustable audio and display settings	•
Audio feedback	•
Automatic cooking/minute timer	•
Automatic pre-set temperatures	•
Celsius/Fahrenheit temperature	•
Delay start	•
Dial with illuminated halo	•
Electronic clock	•
Electronic oven control	•
Guided cooking by food type and recipes	•
Internal Light	•
Intuitive touchscreen display	•
Multi-language display	UK English
Sabbath mode with Star K certification	•
Smart appliance	•
Soft close doors	•
Temperature sensor	•
Wireless temperature sensor compatible	•

Functions

Aero Broil	•
Aero™ Bake	•
Air fry	•
Bake	•
Broil	•
Classic bake	•
Crisp regenerate	•
Maxi Broil	•
Number of functions	24
Pastry Bake	•
Pizza bake	•
Pyrolytic self-clean (Function)	•
Roast	•
Slow cook	•
Sous vide	•
Steam	•
Steam defrost	•
Steam proof	•
Steam regenerate	•
True Aero	•
True Aero + High steam	•
True Aero + Low steam	•
True Aero + Medium steam	•
Vent bake	•
Warm	•

Performance

ActiveVent™ system	•
AeroTech™ technology	•
Automatic rapid pre-heat	•
SteamTechnology	•
Temperature range	95°F –445°F
Whisper Quiet Cooking	•

Power requirements

Amperage	16.6 - 19.4 A
Supply frequency	60 Hz
Supply voltage	208 - 240 V

Product dimensions

Depth	22 1/4 "
Height	23 9/16 "
Width	23 7/16 "

Safety

Balanced oven door	•
Control panel key lock	•
CoolTouch door	•
Non-tip shelves	•
Safety thermostat	•

SKU	82922

The product dimensions and specifications in this page apply to the specific product and model. Under our policy of continuous improvement, these dimensions and specifications may change at any time. You should therefore check with Fisher & Paykel's Customer Care Centre to ensure this page correctly describes the model currently available. © Fisher & Paykel Appliances Ltd 2020

Other product downloads available at fisherpaykel.com

- DXF
- DWG
- Energy Label (English, Canadian French)
- Installation Guide (English)
- Installation Guide (Canadian French)
- Installation Guide (Spanish)
- Planning Guide - 24" Minimal Ovens and Companions (English)
- California Warning Proposition 65 (English, Spanish, Canadian French, Chinese)
- Revit
- Rhino
- Right To Repair Declaration (English, Canadian French)
- SketchUp
- User Guide (English)
- User Guide (Canadian French)

Where applicable:

All appliances use energy, and energy usage typically generates carbon emissions. **Fisher & Paykel Appliances' In-use Energy Carbon Emissions Estimate** indicates carbon emissions from a product's in-use energy. This is calculated either annually or per cycle, using the product's market-specific energy label energy consumption data multiplied by the carbon emissions factor for energy in your country or region.

Our In-use Energy Carbon Emissions Estimate is designed to assist customers in making informed purchasing decisions when comparing different Fisher & Paykel products. For example, a heat pump dryer typically has a lower In-use Energy Carbon Emissions Estimate than a vented dryer.



A PEACE OF MIND SALE
24 Hours 7 Days a Week Customer Support

T 1.888.936.7872 Wwww.fisherpaykel.com