Freestanding Dishwasher

Series 5 | Contemporary

With flexible racking you can adjust to suit your load, and multiple wash features for beautifully clean dishes.

DIMENSIONS

Height	**820 - 870**
Width	**597**
Depth	**600**

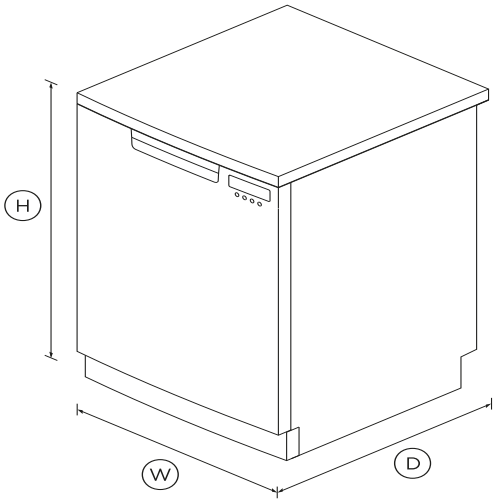

SPECIFICATIONS

Accessories

Cutlery basket	•
Kickstrip	**proud-grey**

Capacity and loading

Accommodates round plates	**260mm**
Fold down tines	•
Height adjustable top basket	•
Utensil tray	•
Wine glass supports	•

Controls

End of cycle beeps	•
Energy saving delay start	•
Rinse aid indicator light	•
Time remaining LED display	•

Features

Quiet operation	•
ThermoDry system	•
Three-stage filtration system	•
Variable wash pressure	•

Power requirements

Amperage	**10A**

Product dimensions

Depth	**600**
Height	**820 - 870**
Width	**597**

Warranty

Parts and labour	**2 years**

Wash Programs

Auto	•
Eco	•

Fast	**30 minutes**
Heavy	•
Medium	**90 minutes**
Rinse	•
Wash programs	**6**

Water connection

Water pressure	**0.03 - 1Mpa**

SKU	81130

The product dimensions and specifications in this page apply to the specific product and model. Under our policy of continuous improvement, these dimensions and specifications may change at any time. You should therefore check with Fisher & Paykel's Customer Care Centre to ensure this page correctly describes the model currently available. ? Fisher & Paykel Appliances Ltd 2020

24/7

A PEACE OF MIND SALE

24 Hours 7 Days a Week Customer Support

T 1300 650 590 **W**www.fisherpaykel.com