30cm Series 9 1 Burner Gas Cooktop, Natural Gas

Series 9 | Minimal

Black Glass | Natural gas



Powerful single wok burner. Pair with any other appliance in our Minimal range.

- Perfect for a compact cooking area with one dual flame wok burner
- A timeless, minimal look to fit any kitchen style, with black ceramic glass cooking zones and a black trim.
- A flame-failure safety device; if the flame goes out, the gas turns off
- Removable cast iron trivets and ceramic glass that can be wiped down for easy cleaning

DIMENSIONS

Height	59 mm
Width	300 mm
Depth	530 mm

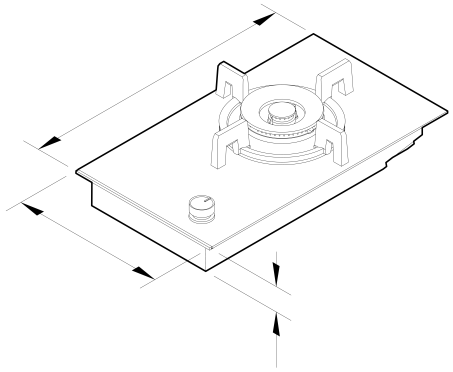

FEATURES & BENEFITS

Complementary Design

The subtle black glass, anodised trim, and black dials blend elegance with durability and are designed to match the Minimal style Series 9 ovens. With premium styling and detailing, these cooktops seamlessly blend with other appliances for a cohesive, considered kitchen design.

Precise Control

The consistent flame and heat distribution of the dual flame wok burner combined with the highly responsive dials offer precise heat adjustment that can perfect a slow simmer for sauces or an intense heat for searing steaks.

Easy Cleaning

Cleaning and care of these cooktops is easy with sealed burners and a single sheet cooking surface. After each use, simply remove the trivets and wipe down the glass.

Quality Materials

Featuring cast iron trivets, anodised metal dials, and high-temperature resistant ceramic glass, our cooktops are built with the finest materials for optimal performance.

Safe & Sound

The flame failure safety device automatically turns off the gas if the flame is accidentally extinguished.

Quality Materials

Our cooktops are built from recyclable, eco-friendly ceramic glass – without using arsenic or heavy metals in the manufacturing process. The glass edges are chip-tested for resistance to damage from pots and pans, ensuring lasting quality.

SPECIFICATIONS

Accessories (included)

Small pan support	•
Wok stand	true

Accessories (sold separately)

Dial kit Professional, Stainless Steel	82225

Burner ratings

Dual wok burner (inner only)	2.4MJ/h
Dual wok burner power	21.5MJ/h

Burners

Wok burner	1 (Dual)

Cleaning

Easy clean cooktop design	•
Quick component removal	•

Consumption

In-use energy carbon emissions estimate	0.0kgCO2e/year

Controls

Dual wok control	•
Ergonomic control dials	•
Toughened fused glass graphics	•

Performance

Blue flame burner	•
Both LPG & NG models available	•
Cast iron trivets	•
Electronic ignition	•
Quick connect gas valves	•

Power requirements

Supply voltage	230 - 240 V

Product dimensions

Depth	530 mm
Height	59 mm
Width	300 mm

Safety

Flame failure system	•

Zones

Number of zones	1

SKU	81992

The product dimensions and specifications in this page apply to the specific product and model. Under our policy of continuous improvement, these dimensions and specifications may change at any time. You should therefore check with Fisher & Paykel's Customer Care Centre to ensure this page correctly describes the model currently available. © Fisher & Paykel Appliances Ltd 2020

Other product downloads available at fisherpaykel.com

- Installation Guide (English)
- Revit
- Rhino
- SketchUp
- User Guide (English)

Where applicable:

All appliances use energy, and energy usage typically generates carbon emissions. **Fisher & Paykel Appliances' In-use Energy Carbon Emissions Estimate** indicates carbon emissions from a product's in-use energy. This is calculated either annually or per cycle, using the product's market-specific energy label energy consumption data multiplied by the carbon emissions factor for energy in your country or region.

Our In-use Energy Carbon Emissions Estimate is designed to assist customers in making informed purchasing decisions when comparing different Fisher & Paykel products. For example, a heat pump dryer typically has a lower In-use Energy Carbon Emissions Estimate than a vented dryer.

24/7

A PEACE OF MIND SALE
24 Hours 7 Days a Week Customer Support
T 1300 650 590 Wwww.fisherpaykel.com