Combination Steam Oven, 60cm, 9 Function

Series 9 | Minimal

Reduce the need for oils and fats with steam cooking, paired with convection oven functions for cooking flexibility.

- 36L total capacity
- Cooking flexibility with nine oven functions, including five Steam functions, Grill and Fan Forced
- Steam cooking allows you to cook a food in its own juices, to retain nutrients and flavour
- Designed to match aesthetically with companion products such as warming drawers, for flexible cooking configurations

DIMENSIONS

Height	**458mm**
Width	**596mm**
Depth	**562mm**

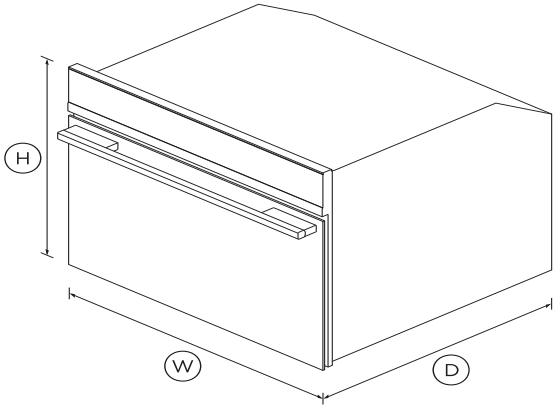

FEATURES & BENEFITS

Sized To Suit
The compact 46cm height means this Combination Steam Oven can be placed almost anywhere. companion products share the same dimensions and can be installed in multiple configurations to suit your kitchen design and preference.

Cooking flexibility
The Combination Steam Oven allows ingredients to retain their nutrients, moisture content and colouration. With nine oven modes, it doesn't just Steam, but also has Grill and Fan functions.

Easy to use
An easy to use, intuitive display shows the time and provides useful information about functions along with a refill alert.

Beauty Of Choice
With the choice of a stylish stainless steel or elegant black trim, our companion products help you achieve a coherent kitchen aesthetic that suits your design style.

Easy Cleaning
Cleaning and care of the Combination Steam Oven is easy. Simply wipe the smooth stainless steel interior with a dry cloth after each use.

Safe And Sound
The CoolTouch door is safe to touch from the outside, protecting your hands and the surrounding cabinetry.

SPECIFICATIONS

Accessories

Baking pan	**1**
Perforated large dish	**1**
Wire shelf	**1**
Wired temperature sensor	**1**

Accessories (sold separately)

Optional 76cm trim kit	**Part 81940**

Capacity

Shelf positions	**3**
Total capacity	**36L**
Usable capacity	**29L**

Cleaning

Easy clean stainless steel	•

Removable water tank	•
Steam clean (oven)	•

Controls

Adjustable audio and display	•
Automatic cooking/minute	•
Automatic pre-set	•
Celsius/Fahrenheit	•
Delay start	•
Electronic capacitive touch	•
Electronic clock	•
Electronic oven control	•
Food probe	•
Guided cooking by food type	•
Halogen lights	•
Intuitive touchscreen display	•

Functions

Fan forced	•
Fan grill	•
Grill	•
Number of functions	**9**
Ring + grill	•
Steam + ring	•
Steam 100 (100°C / 210°F)	•
Steam 130 (130°C / 265°F)	•
Steam assist	•
Steam clean (oven)	•

Performance

Grill power	**1500W**
SteamTechnology	•

Power requirements

Amperage	**15A**
Supply frequency	**50Hz**
Supply voltage	**220 - 240V**

Product dimensions

Depth	**562mm**
Height	**458mm**
Width	**596mm**

Safety

Control panel key lock	•
CoolTouch door	•
Safety thermostat	•

Warranty

Parts and labour	**2 years**

SKU	81924

The product dimensions and specifications in this page apply to the specific product and model. Under our policy of continuous improvement, these dimensions and specifications may change at any time. You should therefore check with Fisher & Paykel's Customer Care Centre to ensure this page correctly describes the model currently available. ? Fisher & Paykel Appliances Ltd 2020

24/7

A PEACE OF MIND SALE

24 Hours 7 Days a Week Customer Support

T 1300 650 590 **W**www.fisherpaykel.com