Series 11 Integrated Tall Single DishDrawer Dishwasher, Water Softener

Series 11 | Integrated

Panel Ready

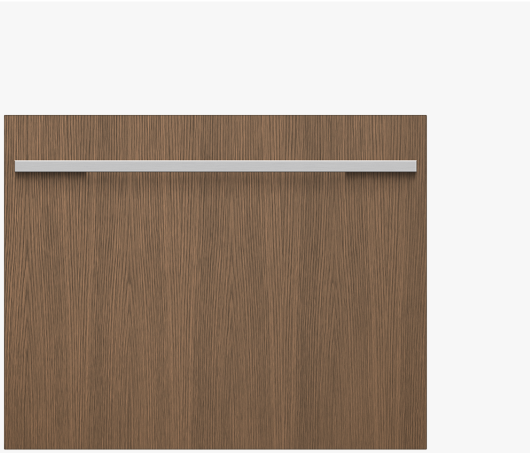

Place anywhere in your kitchen at bench height for easy loading and seamless integration. Features a premium stainless steel interior.

- Eight wash cycles from Heavy to Light, including Auto, 60min and Glassware
- Fits plates up to 310mm, with flexible racking to accommodate other large cookware
- With soft-close drawers, and knock to pause convenience
- Wi-Fi connected for remote control and helpful alerts using the Haier Smart Home app

DIMENSIONS

Height	454 mm
Width	599 mm
Depth	553 mm

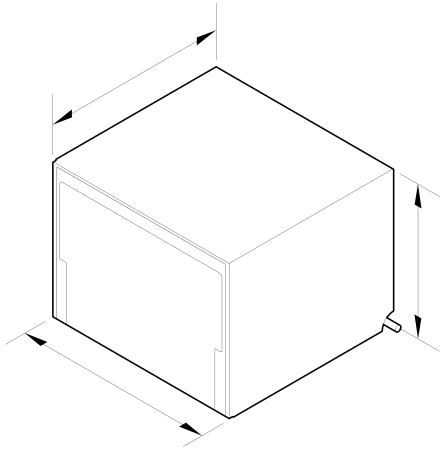

FEATURES & BENEFITS

Seamless Integration

With the flexibility of ergonomic placement and function, single DishDrawer™ Dishwashers can be distributed throughout the kitchen to support patterns of use. The touch-sensitive control panel is located inside this Integrated model, leaving an uninterrupted exterior that blends seamlessly with surrounding cabinetry.

Ease Of Use

DishDrawer™ Dishwashers are beautiful to use with soft-close drawers, and can be conveniently positioned at bench height for ease of loading and minimal bending. Flexible racking includes height-adjustable cup racks and wine glass supports.

Flexible Wash Options

Eight wash programs including Auto, 60min and Glassware, while modifiers such as Sanitise, Dry+ and Quiet provide added wash flexibility. The Quiet wash modifier reduces the noise on some cycles while maintaining performance – perfect for late night washing.

Design Quality

Every detail has been carefully crafted using quality materials, from the easy-to-clean stainless steel interior to the spray arm sensor that detects jams for increased wash confidence.

Control from anywhere

Get the most out of your connected appliance with the Haier Smart Home app. Connect and monitor your smart DishDrawer™ Dishwasher while conveniently accessing the latest tips, remote status notifications, and more.

Quiet Performer

Running at a low decibel rating of 43dBA, these DishDrawer™ Dishwashers do their job without making a fuss. The combination of intelligent technology and simple mechanics means greater reliability and excellent wash performance.

Efficient Performance

This DishDrawer™ Dishwasher uses the water it needs without compromising on wash performance.

SPECIFICATIONS

Accessories (included)

Cutlery basket	•
Knife clip and multipurpose clip	•

Accessories (sold separately)

Door panel black stainless steel	ADDD60STPB
Door panel stainless steel	ADDD60STPX
Handle kit Contemporary round, aluminium	AHS-OBDD-60S
Handle kit Contemporary square fine, aluminium	AHD5DDDW60S
Handle kit Contemporary square fine, black	AHD5DDDW60B
Handle kit Contemporary square, aluminium	AHD3-OBDD-60S
Handle kit Contemporary square, black	AHD3-OBDD-60B

Capacity and loading

Accommodates round plates up to	310mm
Adjustable height, foldable cupracks	•
Fold down tines	•
Pitch adjustable tines	•
Place settings	8
Wine glass supports with stemware grippers	•

Connected Features

Alerts and notifications	•
Education and onboarding	•
Monitoring	•
Software updates	•

Consumption

Cleaning Index	1.2
Drying Index	1.25
Energy consumption	0.55kWh/cycle
Energy rating	Grade 1
Water consumption	6.8L

Controls

Electronic fault/Diagnostic indicator	•
End of cycle beeps	•
Energy saving delay start option of up to 12 hours	•
Internal wash selector	•
Keylock	•
Knock to pause	•
Rinse aid indicator light	•
Smart appliance	•
Spray arm sensing	•

Features

Built-in water softener	•
Fan assisted drying	•
Flood protection	•
Flow through detergent dispenser	•
Internal tub material	Stainless steel
Motor type	BLDC
Quiet operation	•
SmartDrive™ technology	•
Soft close drawer	•
Three-stage filtration system	•

Performance

Noise emissions	43 dBA

Power requirements

Dedicated Circuit (A)	5A
Supply frequency	50 Hz
Voltage	220 - 240V

Product dimensions

Depth	553 mm
Height	454 mm
Width	599 mm

Wash Program Modifiers

Dry +	•
Quiet	•
Sanitise	•
Wash modifiers	3

Wash Programs

60 min	•
Auto	•
Eco	•
Glassware	•
Heavy	•
Light	•
Medium	•
Rinse	•
Wash programs	8

Water connection

Water pressure	100kPa - 1000kPa
Water supply	3/4" BSP (20mm) Connector Water Inlet Hose

SKU	84248

The product dimensions and specifications in this page apply to the specific product and model. Under our policy of continuous improvement, these dimensions and specifications may change at any time. You should therefore check with Fisher & Paykel's Customer Care Centre to ensure this page correctly describes the model currently available. © Fisher & Paykel Appliances Ltd 2020

Other product downloads available at fisherpaykel.com

- DXF
- DWG
- Installation Guide (English)
- Installation Guide (Chinese)
- Planning Guide (Chinese)
- Planning Guide (English)
- Planning Guide (Chinese)
- Revit
- Rhino
- Restriction of the Use of Hazardous Substances (Chinese)
- SketchUp
- User Guide (English)
- User Guide (Chinese)
- Water Efficiency Label

Where applicable:

All appliances use energy, and energy usage typically generates carbon emissions. **Fisher & Paykel Appliances' In-use Energy Carbon Emissions Estimate** indicates carbon emissions from a product's in-use energy. This is calculated either annually or per cycle, using the product's market-specific energy label energy consumption data multiplied by the carbon emissions factor for energy in your country or region.

Our In-use Energy Carbon Emissions Estimate is designed to assist customers in making informed purchasing decisions when comparing different Fisher & Paykel products. For example, a heat pump dryer typically has a lower In-use Energy Carbon Emissions Estimate than a vented dryer.