# 90cm Series 9 Classic 5 Burner Dual Fuel Pyrolytic Cooker

Series 9 | Classic

Red




Get the best of both worlds with dual fuel. A gas cooktop with wok burner is paired with a nine-function convection oven.

- Five burner cooktop with with dual wok burner and rotisserie
- Convection oven with 140L capacity and nine oven functions plus rotisserie including Pastry Bake with Pizza mode
- Non-tip full-extension shelves for safe removal of hot dishes
- Pyrolytic self-clean that breaks down food residue for an easy clean

## DIMENSIONS

| | |
|---|---|
| Height | 898 - 946 mm |
| Width | 897 mm |
| Depth | 600 mm |

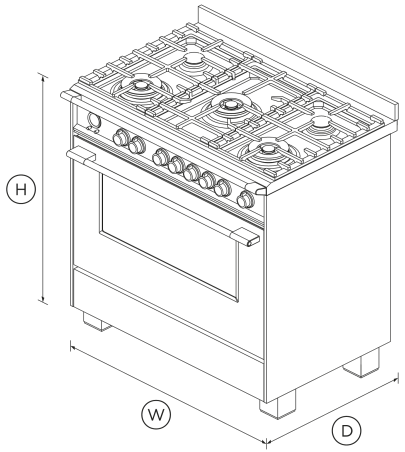


## FEATURES & BENEFITS

**Multi-Shelf Cooking**
Our AeroTech™ system circulates air evenly throughout the entire oven so dishes on the top shelf turn out just as perfectly as food cooking on the bottom shelf.

**Quality And Durability**
Every detail has been carefully crafted. The solid, perfectly balanced soft-close door, durable cooktop trivets and glowing halo dials all add up to an exceptional, premium range.

**Easy To Clean**
Cleaning up spills is effortless. Your cooktop simply needs a quick wipe to keep it looking good as new. The pyrolytic self-clean oven cycle breaks down food residue at a very high temperature, leaving a light ash that's easily removed with a damp cloth.

**Burner Power & Control**
Instant and immediate control from the highest to the gentlest heat. The finely tuned cooktop controls let you sear, stir fry or simmer a delicate sauce to perfection.

**Large Capacity Oven**
The generous 140L total capacity oven gives you plenty of space to cook multiple dishes at once.

**Even heat**
Accurate, electronically-controlled oven heat ensures a great result every time.

## SPECIFICATIONS

**Accessories (included)**

| | |
|---|---|
| Flat wire shelf | 1 |
| Full extension sliding shelves | 2 sets (part 578744) |
| Full extension telescopic shelves | 2 sets (part 578744) |
| Grill rack | TRUE |
| Roasting dish | 1 |
| Rotisserie set | 1 set |
| Small pot support | 1 (part 533981 cast) |
| Step down wire shelf | • |

**Accessories (sold separately)**

| | |
|---|---|
| Kick strip, black (optional) | KICKOR90B1 |
| Kick strip, red (optional) | KICKOR90R1 |
| Kick strip, stainless steel (optional) | KICKOR90X1 |
| Kick strip, white (optional) | KICKOR90W1 |

### Burner ratings

| | |
|---|---|
| Dual wok burner inner/outer (LPG) | 14.9MJ/h |
| Dual wok burner inner/outer (natural gas) | 16.2MJ/h |
| Maximum burner power | 16.2 |
| Semi-rapid burner (LPG) | 5.8MJ/h |
| Semi-rapid burner (natural gas) | 6.5MJ/h |
| Total cooktop power | 58.0 |
| Triple ring wok burner (LPG) x2 | 14.4MJ/h |
| Triple ring wok burner (natural gas) x2 | 14.4MJ/h |

### Capacity

| | |
|---|---|
| Shelf positions (main oven) | 6 |
| Total capacity | 140 L |
| Usable capacity (main oven) | 120 L |

### Cleaning

| | |
|---|---|
| Acid resistant graphite enamel | • |
| Drop down grill element | • |
| Pyrolytic proof shelf runners | • |
| Pyrolytic self-clean | • |
| Removable oven door | • |
| Removable oven door inner glass | • |
| Removable shelf runners | • |

### Controls

| | |
|---|---|
| Audio feedback | • |
| Automatic cooking/minute timer | • |
| Automatic pre-set temperatures | • |
| Celsius/Fahrenheit temperature | • |
| Electronic clock | • |
| High resolution display | • |
| Laser etched graphics | • |
| Precise electronic temperature control | • |
| Sabbath mode | • |
| Turned stainless steel clock buttons | • |
| Turned stainless steel clock crown (dial) | • |

### Installation Dimensions

| | |
|---|---|
| Installation cutout dimensions (Depth) | 600 mm |
| Installation cutout dimensions (Width) | 900 mm |

### Oven features

| | |
|---|---|
| AeroTech™ technology | • |
| Automatic rapid pre-heat | • |
| Bright chromed, cast zinc dials with illuminated halos | • |
| Electronic oven control | • |
| Soft open/close door | • |
| Twin cavity fans | • |
| Warming drawer | • |

### Oven functions

| | |
|---|---|
| Bake | • |
| Fan bake | • |
| Fan forced | • |
| Fan grill | • |
| Grill | • |
| Number of functions | 9 |
| Pastry Bake with Pizza mode | • |
| Rapid proof | • |
| Roast | • |
| Rotisserie | • |
| True convection | • |

### Oven performance

| | |
|---|---|
| CoolTouch door | Quadruple glazed |
| Warming drawer power | 202 W |

### Power requirements

| | |
|---|---|
| Amperage | 23 A |
| Supply frequency | 50 Hz |
| Supply voltage | 220 - 240 V |

### Product dimensions

| | |
|---|---|
| Depth | 600 mm |
| Height | 898 - 946 mm |
| Width | 897 mm |

### Rangetop features

| | |
|---|---|
| Brass burner spreader (power burner) | • |
| Embossed brass burner cap (power burner) | • |
| Hob rail | • |
| Hob rear trim | 60 mm |
| LPG / Natural Gas compatible | • |
| Sealed range top | • |

### Safety

| | |
|---|---|
| Advanced cooling system | • |
| Anti-tilt bracket | • |
| Balanced oven door | • |
| Catalytic venting system | • |
| CoolTouch door | • |
| Flame failure system | • |
| Full extension telescopic sliding shelves | • |

| | |
|---|---|
| Non-tip shelves | • |
| Spill containment | 26 L |

| | |
|---|---|
| SKU | 81691 |

The product dimensions and specifications in this page apply to the specific product and model. Under our policy of continuous improvement, these dimensions and specifications may change at any time. You should therefore check with Fisher & Paykel's Customer Care Centre to ensure this page correctly describes the model currently available. © Fisher & Paykel Appliances Ltd 2020

Other product downloads available at fisherpaykel.com

- Installation Guide (English)
- Installation Guide - Kick Strip (English)
- Revit
- Rhino
- SketchUp
- User Guide (English)

Where applicable:

All appliances use energy, and energy usage typically generates carbon emissions. **Fisher & Paykel Appliances' In-use Energy Carbon Emissions Estimate** indicates carbon emissions from a product's in-use energy. This is calculated either annually or per cycle, using the product's market-specific energy label energy consumption data multiplied by the carbon emissions factor for energy in your country or region.

Our In-use Energy Carbon Emissions Estimate is designed to assist customers in making informed purchasing decisions when comparing different Fisher & Paykel products. For example, a heat pump dryer typically has a lower In-use Energy Carbon Emissions Estimate than a vented dryer.

24/7

A PEACE OF MIND SALE
24 Hours 7 Days a Week Customer Support
T 0800 372 273 Wwww.fisherpaykel.com