30" Series 9 Minimal Vacuum Drawer

Series 9 | Minimal

Black Glass



This refined and minimal Vacuum Drawer can be used to prepare food for sous vide cooking, marinating and storage.

- Three levels of vacuum and heat sealing for food storage, marinating or portioning
- Effortless preparation for sous vide cooking
- Push-to-open drawer and intuitive touch controls for effortless operation
- Designed to match our Minimal style appliances, for the ultimate kitchen solution

DIMENSIONS

Height	10 11/16 "
Width	29 7/8 "
Depth	22 1/2 "

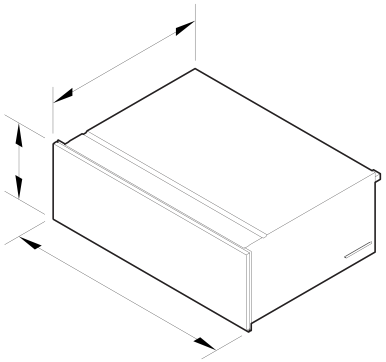

FEATURES & BENEFITS

PRESERVE FRESHNESS

Vacuum sealing removes excess air to create the ideal environment for longer-lasting freshness. By reducing air exposure, it helps prevent bacteria growth and freezer burn, keeping flavours and textures intact. Food-grade, BPA-free bags offer a safe and reusable storage solution.

EFFORTLESS SOUS VIDE PREPARATION

Enhance flavor and texture with vacuum sealing that locks in marinades, natural juices, and nutrients. Create perfectly sealed portions ready for precise sous vide cooking, ensuring consistently tender and flavorful results.

THREE LEVELS OF SEALING

Choose from three levels of vacuum sealing to suit a variety of foods, from delicate items such as soft fruits and herbs to hearty cuts of meat.

PERFECT WINE PRESERVATION

Keep your wine tasting at its best with a simple vacuum seal. Using the included tube, adapters and stopper, air is gently removed to preserve flavor and aroma, so every pour stays fresh and perfectly balanced.

EASY TO CLEAN

The stainless steel interior is designed for simple maintenance and can be easily wiped clean with a damp cloth.

DESIGNED TO MATCH

Designed to complement our Minimal style family of appliances, this Vacuum Drawer features a black glass finish with refined detailing. Able to be seamlessly built in almost anywhere, our companion products are crafted to align beautifully and install at the height that best suits your kitchen and lifestyle.

SPECIFICATIONS

Accessories (included)

External vacuuming accessory kit	**Adaptor, stopper and tube**
Large size BPA-free vacuum seal bags	**50 bags, Part 793034**
Small size BPA-free vacuum seal bags	**50 bags, Part 793033**

Capacity

Maximum vacuum seal bag size	**9 7/16" x 13 3/4"**

Cleaning

Easy clean glass lid	•

Controls

Audio feedback	•
Electronic capacitive touch controls	•
Maintenance and moisture indicator	•
Push-to-open drawer	•
Standby mode	•

Performance

External vacuuming	•
Prepare food for sous-vide cooking	•
Vacuum levels	3
Vacuum sealing levels	3

Power requirements

Amperage	10 A
Supply frequency	60 Hz
Supply voltage	120 V

Product dimensions

Depth	22 1/2 "
Height	10 11/16 "
Width	29 7/8 "

SKU	84830

The product dimensions and specifications in this page apply to the specific product and model. Under our policy of continuous improvement, these dimensions and specifications may change at any time. You should therefore check with Fisher & Paykel's Customer Care Centre to ensure this page correctly describes the model currently available. © Fisher & Paykel Appliances Ltd 2020

Other product downloads available at fisherpaykel.com

- DWG
- DXF
- Care & Maintenance (English)
- First Use (English, Canadian French, Spanish)
- First Use (English)
- First Use (English)
- First Use (Canadian French)
- First Use (Spanish)
- Installation Guide (English)
- Installation Guide (Canadian French)
- Installation Guide (Spanish)
- Installation Guide (English, Canadian French, Spanish)
- Planning Guide - 30" Minimal Handleless (English)
- Planning Guide - 30" Minimal (English)
- Planning Guide - 30" Minimal Handleless (Canadian French)
- Planning Guide - 30" Minimal (Canadian French)
- Planning Guide - 30" Minimal Handleless (Spanish)
- Planning Guide - 30" Minimal (Spanish)
- Revit
- Rhino
- Right To Repair Declaration (English, Canadian French)
- Safety & Warnings (English, Canadian French, Spanish)
- Safety & Warnings (English)
- Safety & Warnings (Canadian French)
- Safety & Warnings (Spanish)
- SketchUp

Where applicable:

All appliances use energy, and energy usage typically generates carbon emissions. **Fisher & Paykel Appliances' In-use Energy Carbon Emissions Estimate** indicates carbon emissions from a product's in-use energy. This is calculated either annually or per cycle, using the product's market-specific energy label energy consumption data multiplied by the carbon emissions factor for energy in your country or region.

Our In-use Energy Carbon Emissions Estimate is designed to assist customers in making informed purchasing decisions when comparing different Fisher & Paykel products. For example, a heat pump dryer typically has a lower In-use Energy Carbon Emissions Estimate than a vented dryer.

24/7

A PEACE OF MIND SALE
24 Hours 7 Days a Week Customer Support

T 1.888.936.7872 Wwww.fisherpaykel.com