ENERGY
енергия · ενεργεια
IJA IE IA

Fisher & Paykel RS6121F

A+++
A++
A+
A
B
C
D

A+

ENERGIA · ЕНЕРГИЯ
ΕΝΕΡΓΕΙΑ · ENERGIJA
ENERGY · ENERGIE · ENERGI

424
kWh/annum

1L
– L

295 L

42 dB

2010/1060

851705A

PRINT SPECIFICATION
Trim size: 270h x 110w mm 1 sided 4 colour process Material: 220GSM Semi-gloss card, white Creased 50mm from head (Crease shown in artwork), apply Double Coated Adhesive Tape DCT-210 12-19mm wide applied to underside of flap, aligned to rear edge (see drawing)

REVISIONS

DRWN	DATE	CHKD	ECN	REV
RR	25.09.2018	XX	XXXXX	A

FISHER & PAYKEL

FISHER & PAYKEL APPLIANCES LIMITED

TITLE: 851705A RS6121F Refrig Energy Label_EU_FA_OL.pdf	
DRAWN: RR	DATE: 25.09.2018
PART NO: 851705A	SCALE: 1:1
	REVISION: A
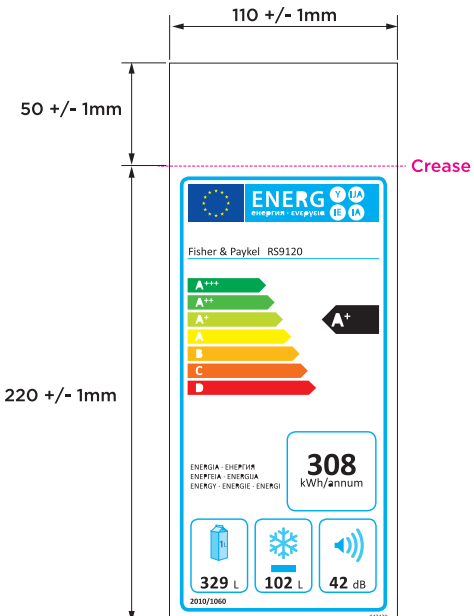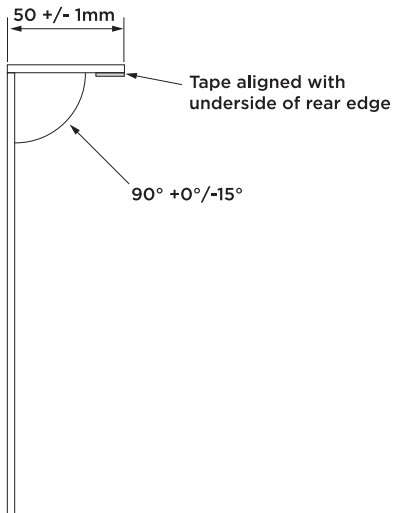
© COPYRIGHT FISHER & PAYKEL APPLIANCES LTD. ALL RIGHTS RESERVED