39cm Series 9, 1 Burner Gas Cooktop, Natural Gas

Series 9 | Minimal

Grey Glass | Natural gas



Powerful single wok burner. Compatible with our series of modular cooktops, it allows for customisable configurations to suit any kitchen design.

- Perfect for a compact cooking area with one dual flame wok burner
- Mix and match with our modular induction cooktops for a custom kitchen setup
- Independently controlled via a manual dial for flexible cooking options
- Flexible installation with options for both flush and raised to complement your benchtop design

DIMENSIONS

Height	126 mm
Width	385 mm
Depth	530 mm

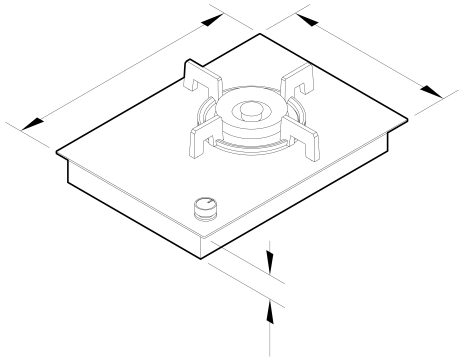

FEATURES & BENEFITS

Modular Design Freedom
Achieve complete design freedom with our range of modular cooktops. Seamlessly integrate cooktops of various sizes into your cooking space, tailoring the setup to suit your patterns of use. This design flexibility allows you to optimise space and flow, creating a kitchen that perfectly aligns with the way you live, cook and entertain.

Precise Control
The consistent flame and heat distribution of the dual flame wok burner combined with the highly responsive dials offer precise heat adjustment that can perfect a slow simmer for sauces or an intense heat for searing steaks.

Easy Cleaning
Cleaning and care of these cooktops is easy with sealed burners and a single sheet cooking surface. After each use, simply remove the trivets and wipe down the glass.

Quality Materials
Featuring cast iron trivets, anodised metal dials, and high-temperature resistant ceramic glass, our cooktops are built with the finest materials for optimal performance.

Safe & Sound
The flame failure safety device automatically turns off the gas if the flame is extinguished.

Crafted for Durability
Our cooktops are built with glass edges that are chip-tested to resist damage from pots and pans, ensuring lasting quality.

SPECIFICATIONS

Accessories (included)

High power wok cooking	•
Joining bracket	1
Small pan support	•
Wok stand	1

Burner ratings

Wok burner (natural gas)	4.75 kW

Burners

Number of burners	1

Cleaning

Easy clean cooktop design	•
Quick component removal	•

Consumption

In-use energy carbon emissions estimate	0.0kgCO2e/year

Controls

Dual wok control	•
Dual wok feature for simmering	•
Ergonomic control dials	•
Modular compatibility	Standalone
Toughened fused glass graphics	•

Features

Modular design	•

Performance

Blue flame burner	•
Both LPG & NG models available	•
Cast iron trivets	•
Dishwasher proof trivets	•
Electronic ignition	•
Quick connect gas valves	•

Power requirements

Amperage	10 A
Electrical connection	Power cable
Supply frequency	50 Hz
Supply voltage	220-240 V

Product dimensions

Depth	530 mm
Height	126 mm
Width	385 mm

Safety

Flame failure system	•

SKU	84851

The product dimensions and specifications in this page apply to the specific product and model. Under our policy of continuous improvement, these dimensions and specifications may change at any time. You should therefore check with Fisher & Paykel's Customer Care Centre to ensure this page correctly describes the model currently available. © Fisher & Paykel Appliances Ltd 2020

Other product downloads available at fisherpaykel.com

- DXF
- DWG
- Energy Label Gas on Glass Cooktop
- Installation Guide (English)
- Installation Guide (Chinese)
- Planning Guide (English)
- Planning Guide (Chinese)
- Revit
- Rhino
- Restriction of the Use of Hazardous Substances (Chinese)
- SketchUp
- User Guide (English)
- User Guide (Chinese)

Where applicable:

All appliances use energy, and energy usage typically generates carbon emissions. **Fisher & Paykel Appliances' In-use Energy Carbon Emissions Estimate** indicates carbon emissions from a product's in-use energy. This is calculated either annually or per cycle, using the product's market-specific energy label energy consumption data multiplied by the carbon emissions factor for energy in your country or region.

Our In-use Energy Carbon Emissions Estimate is designed to assist customers in making informed purchasing decisions when comparing different Fisher & Paykel products. For example, a heat pump dryer typically has a lower In-use Energy Carbon Emissions Estimate than a vented dryer.