60cm Series 9 Minimal Handleless Pyrolytic Oven

Series 9 | Minimal

Black Glass



Achieve perfect results with every dish using this Minimal style, handleless oven featuring an intuitive touchscreen for guided cooking.

- Handleless oven design ensures smooth, uninterrupted lines in your kitchen cabinetry for a cohesive look
- Guided touchscreen cooking offers helpful tips for different food types as well as full recipes
- 85L total capacity with 16 oven functions including Pastry Bake, Roast, and Air Fry
- Pyrolytic self-cleaning function breaks down food residue for an easy clean

DIMENSIONS

Height	598 mm
Width	596 mm
Depth	565 mm

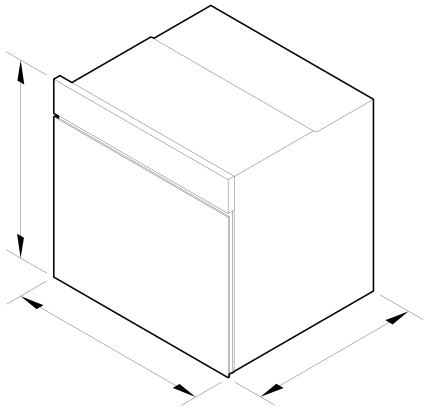

FEATURES & BENEFITS

Handleless Design

Effortlessly open and close your oven with a gentle press of a button, ensuring convenience and smooth operation in the kitchen. Moving away from traditional oven doors, this model is an ideal match for kitchens with a continuous, handle-free design, ensuring a seamless flow across the cabinetry.

Cook With Confidence

Using the large 5" touchscreen you can select a cooking method or hero ingredient and your oven will provide heat type and temperature recommendations for perfect results. For added versatility, you can also select your go-to cooking functions.

Generous Capacity

With a generous 85L total capacity, you can create several perfectly cooked dishes at once using multiple shelves. Non-tip, full-extension shelves help to ensure safe removal of hot dishes.

Exceptional Performance

Our unique cooking technologies were developed to help deliver perfect results. ActiveVent ensures optimised moisture levels, while AeroTech™ circulates heat evenly for a consistent temperature.

Self-Cleaning

Pyrolytic self-clean breaks down food residue at a very high temperature, leaving a light ash that's easily removed with a damp cloth. The enamel-coated side racks don't need to be removed when using this function.

Design Freedom

Crafted with premium materials and detailing, this oven supports a cohesive and considered kitchen design. Complement it with our Minimal style Warming Drawer to achieve the ultimate kitchen solution.

SPECIFICATIONS

Accessories (included)

Flat brushed baking tray	1
Grill rack	1 set
Pyrolytic proof shelf runners	•
Roasting dish	1
Smokeless grill tray	1
Step down wire shelf	1
Wired temperature sensor	1

Capacity

Shelf positions	6
Total capacity	85 L
Usable capacity	72 L

Cleaning

Acid resistant graphite enamel	•
Easy to clean interior	•
Pyrolytic self-clean	•
Pyrolytic-proof side ladders	•
Removable oven door	•
Removable oven door inner glass	•
Removable side ladders	•

Controls

Adjustable audio and display settings	•
Audio feedback	•
Automatic cooking/minute timer	•
Automatic pre-set temperatures	•
Celsius/Fahrenheit temperature	•
Delay start	•
Electronic capacitive touch controls	•
Electronic clock	•
Electronic oven control	•
Guided cooking by food type and recipes	•
Handle-free design	•
Internal Light	•
Intuitive touchscreen display	•
Multi-language display	true
Soft close doors	•
Temperature sensor	•
Touch control glass interface	•
True convection oven	•
Wireless temperature sensor compatible	•

Functions

Air fry	•
Bake	•
Classic bake	•
Dehydrate	•
Fan bake	•
Fan forced	•
Fan grill	•
Grill	•
Pastry Bake	•
Pizza bake	•
Pyrolytic self-clean (Function)	•
Rapid proof	•
Roast	•
Slow cook	•
Vent bake	•
Warm	•

Performance

ActiveVent™ system	•
Automatic rapid pre-heat	•
Temperature range	35 - 280

Power requirements

Amperage	20 A
Supply frequency	50 Hz
Supply voltage	220 - 240 V

Product dimensions

Depth	565 mm
Height	598 mm
Width	596 mm

SKU 82507

The product dimensions and specifications in this page apply to the specific product and model. Under our policy of continuous improvement, these dimensions and specifications may change at any time. You should therefore check with Fisher & Paykel's Customer Care Centre to ensure this page correctly describes the model currently available. © Fisher & Paykel Appliances Ltd 2020

Other product downloads available at fisherpaykel.com

- DXF
- DWG
- Installation Guide (English)
- Installation Guide (Chinese)
- Planning Guide (English)
- Planning Guide (Chinese)
- Revit
- Rhino
- Restriction of the Use of Hazardous Substances (Chinese)
- SketchUp
- User Guide (English)
- User Guide (Chinese)

Where applicable:

All appliances use energy, and energy usage typically generates carbon emissions. **Fisher & Paykel Appliances' In-use Energy Carbon Emissions Estimate** indicates carbon emissions from a product's in-use energy. This is calculated either annually or per cycle, using the product's market-specific energy label energy consumption data multiplied by the carbon emissions factor for energy in your country or region.

Our In-use Energy Carbon Emissions Estimate is designed to assist customers in making informed purchasing decisions when comparing different Fisher & Paykel products. For example, a heat pump dryer typically has a lower In-use Energy Carbon Emissions Estimate than a vented dryer.