12kg Series 7 Contemporary Front Loader Washer, FlexiDose

Series 7 | Front Load

White



An advanced Front Loader Washer where intelligent sensing meets delicate care. The vibrant 5” touchscreen controls and flexible convenience ensure every cycle is effective, gentle and reliable.

- Advanced care for 7 fibre types, including ultra-delicate Silk and Down
- Vibrant 5” touchscreen for intuitive cycle selection
- Flexi Dose for customised Auto Dose of up to 21 washes without refilling
- ActiveIntelligence™ senses size and soiling for a perfectly balanced wash cycle
- Connect SmartHQ™ for real-time updates, guides and extra functions

DIMENSIONS

Height	850 mm
Width	602 mm
Depth	661 mm

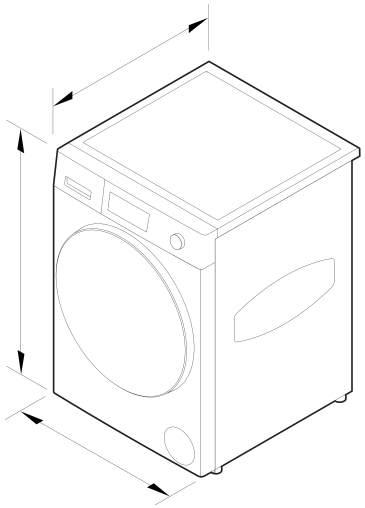

FEATURES & BENEFITS

ADVANCED CARE FOR DELICATES

Fisher & Paykel Series 7 Washers make caring for your delicate garments effortless with a full-colour 5” touchscreen guiding every wash. From soft Silk and delicate Down to Woolmark Black certified Wool cycles, intelligent technology automatically adjusts the wash for each fibre type, delivering the perfect clean while protecting fabrics. With ActiveIntelligenceTM load and soil level sensing, plus options for item type and colour, you can further customise each cycle — extending the life of garments by keeping them looking and feeling their best.

REFRESH WITH STEAM

Gently relax fibres to reduce wrinkles and odours with Steam Refresh. Perfect for a down jacket or duvet, Steam restores shape, softness and freshness in minutes without a full wash. By adding just the right amount of moisture and movement, Steam helps revive compressed down fibres, restoring softness, shape, and improving fluffiness so your garments look and feel their best.

CUSTOMISED AUTO DOSE, IDEAL FOR SILK

Everyday routines are simpler when the details are taken care of for you with Auto Dose. ActiveIntelligence™ senses load size and soil level, Auto Dose delivers the right amount of detergent, and Active Mix blends it with water for a gentle, effective wash. Two FlexiDose reservoirs let you use detergent and softener, storing enough for up to 21 washes when both are used for detergent, or specialised formulas — ideal for Silk, with it’s delicate protein fibres that weaken when wet and need extra care to maintain softness and sheen.

GENTLE AND HYGIENIC

Keep garments hygienic with two sanitising options, both proven to eliminate 99.9% of bacteria*. UV Sanitise works at low temperatures, ideal for heat-sensitive fibres like Elastane that can degrade under high heat. For more durable fabrics, hot water Sanitise delivers a traditional-high temperature clean. *UV Sanitise independently certified to eliminate 99.9% of Staphylococcus aureus and Escherichia coli using the Cotton Fibre Type, Durable Item Type, Sanitise Treatment, Dark Colour, Moderate Soil Level and Manual Auto Dose settings. Sanitise independently certified to eliminate 99.9% of Staphylococcus aureus and Escherichia coli using the Mixed Fibre Type, Moderate Item Type, Sanitise Treatment, Mixed Colour, Moderate Soil Level and Manual Auto Dose settings.

WASHING THAT WAITS FOR YOU

Crease Free gives you flexibility to unload laundry when it suits you. Ideal for Down, which can clump and compress when wet, Crease Free gently tumbles the load while damp, helping separate and loosen fibres. This preserves the natural loft and softness of Down garments and bedding, keeping them looking and feeling their best.

CLASS-LEADING EFFICIENCY

Designed to reduce running costs and environmental impact with 5-star energy and 5-star water ratings, you can trust that your fabric care routine is both effective and sustainable. The SmartDrive™ motor ensures quiet operation and long-lasting reliability, with fewer moving parts for reduced wear over time.

PRECISION IN EVERY DETAIL

Our most perfect pair yet, reimagined for modern living. With a single 5" touchscreen, angled and streamlined for effortless cycle control, plus a newly positioned lint filter on the dryer, it offers a seamless fabric care experience, elevated beyond the utility space. Designed to complement one another in both form and function, our Front Loader Washers and Heat Pump Dryers feature refined materials, large doors and complementary cycles that work in harmony to care for a wide range of fibres.

SPECIFICATIONS

Capacity

Capacity	12 kg

Connected Features

Alerts and notifications	•
Education and onboarding	•
Monitoring	•
Remote operation	•
Software updates	•

Consumption

Energy rating	5 star
Energy usage	275kWh/year
In-use energy carbon emissions estimate	24.8kgCO2e/year
Rated capacity (AU NZ only)	12
Water consumption per cycle	86L
Water rating	5 star (WELS)

Controls

Adjustable audio and display settings	•
Interface type	5" touchscreen
Screen brightness settings	•
Two button start compliant	•

Features

Active Mix	•
Add a garment (immediate door opening)	•
Advanced out of balance detection	•
Anti-Bacteria Treatment (ABT)	•
Anti-fungal door gasket	•
Auto out of balance correction	•
Automatic water level	•
Controlled cold	•
Crease Free	•
Delay start	•
Detergent dispenser	Auto Dose
Excess suds detection	•
Extra large door	•
Extra Rinse	•
Fabric softener dispenser	Auto Dose
Favourite mode	Multiple
Flood protection	•
Front and back levelling feet	•
Interior light	•
Keylock	•
Optimise Wash	•
Pre Wash Cold	•
Progress indicator	•
Quiet mode	•
Reverse tumbling	Full reverse tumbling
Smart appliance	•
Soak	•
Stainless steel drum	•
Time saver function	•
Time to go	•
Water supply	Hot & Cold
Woolmark certified	Woolmark Black

Performance

ActiveIntelligence™ technology	•
Auto load sensing	•
Auto soil sensing	•
Maximum spin speed	1400 rpm
Motor type	Direct Drive
Number of spin speeds	5
SmartDrive™ technology	•
Vortex wash	•

Product dimensions

Depth	661 mm
Height	850 mm
Width	602 mm

SKU 92332

The product dimensions and specifications in this page apply to the specific product and model. Under our policy of continuous improvement, these dimensions and specifications may change at any time. You should therefore check with Fisher & Paykel's Customer Care Centre to ensure this page correctly describes the model currently available. © Fisher & Paykel Appliances Ltd 2020

Other product downloads available at fisherpaykel.com

- DWG
- DXF
- Energy Label
- Installation Guide - Side by Side (English)
- Installation Guide - Stacked (English)
- Installation Guide (English)
- Planning Guide (English)
- Revit
- Rhino
- Introducing Fabric Care Solutions (English)
- Sketchup
- User Guide (English)

Where applicable:

All appliances use energy, and energy usage typically generates carbon emissions. **Fisher & Paykel Appliances' In-use Energy Carbon Emissions Estimate** indicates carbon emissions from a product's in-use energy. This is calculated either annually or per cycle, using the product's market-specific energy label energy consumption data multiplied by the carbon emissions factor for energy in your country or region.

Our In-use Energy Carbon Emissions Estimate is designed to assist customers in making informed purchasing decisions when comparing different Fisher & Paykel products. For example, a heat pump dryer typically has a lower In-use Energy Carbon Emissions Estimate than a vented dryer.

24/7

A PEACE OF MIND SALE
24 Hours 7 Days a Week Customer Support
T 0800 372 273 Wwww.fisherpaykel.com