60cm Series 9 Contemporary Pyrolytic Oven

Series 9 | Contemporary

Stainless Steel



A highlight of the Fisher & Paykel collection, this Series 9 oven with touchscreen ensures that every dish is cooked to perfection.

- Touchscreen guided cooking capability offers helpful tips for different food types as well as full recipes
- 85L total capacity with 16 oven functions including Roast and Pastry Bake
- Moisture level control with ActiveVent™ technology
- Pyrolytic self-cleaning function breaks down food residue for an easy clean

DIMENSIONS

Height	598 mm
Width	596 mm
Depth	565 mm

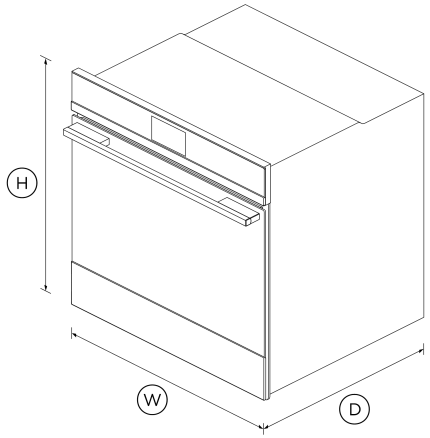

FEATURES & BENEFITS

Cook With Confidence

Our touchscreen interface provides an intuitive guided cooking experience that helps deliver perfect results, whether you've been cooking all your life or just starting out. Cook with a favourite method, a hero ingredient, or a go-to cooking function or recipe.

Generous capacity

With its market-leading 3 cu ft total capacity, you can create several perfectly cooked dishes at once using multiple shelves.

Multi-Function Flexibility

The cooking functions have each been tailored, tested, tweaked and perfected to ensure that no matter what you're cooking, you've got the right heat to match. Purchase our Wireless Temperature Sensor accessory and precisely monitor cooking in real time (accessory sold separately).

Exceptional performance

Our unique cooking technologies were developed to deliver perfect results. ActiveVent ensures optimised moisture levels, while AeroTech™ circulates heat evenly for a consistent temperature.

Self-Cleaning

Our self-clean technology breaks down food residue at a very high temperature, leaving a light ash that's easily removed with a damp cloth. The enamel coated side racks don't need to be removed when using this function.

Design Freedom

Available in an elegant black or a stylish black with stainless steel, this oven is designed to fit seamlessly into your kitchen. Premium materials and detailing to support a cohesive, considered kitchen design.

SPECIFICATIONS

Accessories (included)

Full extension sliding shelves	2 sets
Grill rack	1 set
Roasting dish	1
Wired temperature sensor	1

Accessories (sold separately)

Optional Accessory round handle	Part 81645

Capacity

Shelf positions	6

Total capacity	85 L
Usable capacity	72 L

Cleaning

Acid resistant graphite enamel	•
Pyrolytic self-clean	•
Removable oven door	•
Removable oven door inner glass	•
Removable side ladders	•

Controls

Adjustable audio and display settings	•
Automatic cooking/minute timer	•
Automatic pre-set temperatures	•
Celsius/Fahrenheit temperature	•
Certified Sabbath mode	•
Electronic clock	•
Electronic oven control	•
Guided cooking by food type and recipes	•
Intuitive touchscreen display	•
Multi-language display	UK English
Soft close doors	•
Temperature sensor	•

Functions

Air fry	•
Bake	•
Classic bake	•
Dehydrate	•
Fan bake	•
Fan forced	•
Fan grill	•
Grill	•
Number of functions	16
Pastry Bake	•
Pizza bake	•
Pyrolytic self-clean (Function)	•
Rapid proof	•
Roast	•
Slow cook	•
Vent bake	•
Warm	•

Performance

ActiveVent™ system	•
AeroTech™ technology	•
Automatic rapid pre-heat	•
Grill power	3000 W
Whisper quiet cooking	•

Power requirements

Amperage	15 A
Supply frequency	50 Hz
Supply voltage	220 - 240 V

Product dimensions

Depth	565 mm
Height	598 mm
Width	596 mm

Safety

Balanced oven door	•
Catalytic venting system	•
Control panel key lock	•
CoolTouch door	•
Non-tip shelves	•

SKU	81781

The product dimensions and specifications in this page apply to the specific product and model. Under our policy of continuous improvement, these dimensions and specifications may change at any time. You should therefore check with Fisher & Paykel's Customer Care Centre to ensure this page correctly describes the model currently available. © Fisher & Paykel Appliances Ltd 2020

Other product downloads available at fisherpaykel.com

- DXF
- Data Sheet (English)
- DWG
- Installation Guide (Chinese)
- Revit
- Revit
- Rhino
- Rhino
- Restriction of the Use of Hazardous Substances (Chinese)
- Restriction of the Use of Hazardous Substances (Chinese)
- Restriction of the Use of Hazardous Substances (Chinese)
- SketchUp
- SketchUp

Where applicable:

All appliances use energy, and energy usage typically generates carbon emissions. **Fisher & Paykel Appliances' In-use Energy Carbon Emissions Estimate** indicates carbon emissions from a product's in-use energy. This is calculated either annually or per cycle, using the product's market-specific energy label energy consumption data multiplied by the carbon emissions factor for energy in your country or region.

Our In-use Energy Carbon Emissions Estimate is designed to assist customers in making informed purchasing decisions when comparing different Fisher & Paykel products. For example, a heat pump dryer typically has a lower In-use Energy Carbon Emissions Estimate than a vented dryer.