606L Series 7 Quad Door Refrigerator Freezer, Through Door Ice and Water

Series 7 | Contemporary

Black



This Quad Door Refrigerator Freezer has everything within reach. Enjoy chilled, filtered water by the glass or bottle, plus cubed or crushed ice on demand. Three independently controlled zones, including a Variable Temperature Zone, allow you to adapt storage conditions to different foods. With clean lines and recessed handles, it brings refined design, intelligent technology, and flexible food care together in one considered appliance.

- External water dispenser, with hands-free measured filling and support ledge for bottles
- Cubed or crushed ice available through the door, producing up to 1.2kg per day
- Variable Temperature Zone with Fridge, Chill, Soft Freeze, and Gentle Freeze modes
- Connect with Wi-Fi and the SmartHQ™ app to receive notifications and guides

DIMENSIONS

Height	1790 mm
Width	905 mm
Depth	747 mm

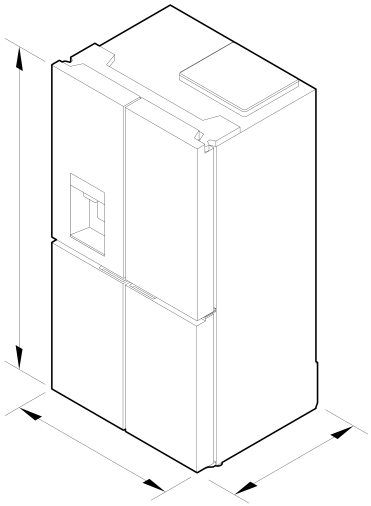

FEATURES & BENEFITS

Everything Within Reach

Every occasion calls for something different. This Freestanding Quad Door Refrigerator keeps chilled, filtered water and two types of ice, cubed and crushed, instantly accessible through the door. The Variable Temperature Zone can be adjusted to optimal storage conditions for different ingredients, so your kitchen is always ready for whatever the moment brings.

Effortless Water Dispensing

Easy access and measured filling transform everyday water use from routine to ritual. The external water dispenser offers both a traditional paddle and hands-free measured fill for consistent and convenient dispensing, with a built-in ledge designed to accommodate larger bottles and provide stability during use.

Ice for Every Occasion

From a quiet drink to an evening with guests, the right type of ice is important. Cubed ice holds its form for a slower chill, while crushed ice, with more surface area, cools drinks quickly and blends easily into cocktails. Producing up to 1.2kg of ice per day, with both cubed and crushed available through the door, so every pour is perfect.

Optimal Cooling Climates

Shaped by the Mastery of Temperature, our Variable Temperature Zone with Fridge, Chill, Soft Freeze, and Gentle Freeze modes lets you create the optimal climate for perfect food care. The perfect balance of preservation and convenience, Soft Freeze mode allows you to store meat for longer than fresh while keeping it at the ideal temperature for slicing without defrosting, while Fridge mode can increase fresh food storage capacity by nearly 40%.

Extend Freshness With Humidity Control

Optimal humidity is fundamental to the preservation of fruits and vegetables. Our Humidity Control Bins with grooved lids are tested by our team of food scientists to maintain ideal humidity levels. Proven to store fruit and vegetables fresher for up to 10 times longer* than on the main shelf, preserving the flavour, nutrients and texture of your produce. *Based on internal testing, according to IEC 63169:2020/A1:2025.

Considered Design

In the heart of a busy kitchen, every detail is intentional. Recessed handles, a discreet internal user interface and clean, balanced proportions create a unified aesthetic.

Engineered for Life

Refrigerators need to endure years of daily use. Designed for reliable performance, our models are life-tested beyond standard safety requirements, with each door shelf impact-tested over 70,000 times, equivalent to an estimated 20 years of real-life usage, to ensure lasting durability.

SPECIFICATIONS

Accessories (sold separately)

Matching Replacement Water Filter Model	FPWF1 - 847200

Capacity

Volume	606 L
Volume freezer	137.5 L
Volume refrigerator	335.4 L
Volume variable temperature compartment	133.1 L

Connected Features

Alerts and notifications	•
Consumable subscription	•
Education and onboarding	•

Consumption

Energy rating	4.5 star
Energy usage	408kWh/y

Features

Adjustable glass cantilevered shelves	•
Cantilevered glass shelves	2
Door alarm	•
Fruit and vegetable bins	2
LED ceiling lighting	•
Smart appliance	•

Freezer Features

Automatic ice maker	•
Bottle chill	•
Door alarm	•
Door shelves	6
Drawer alarm	•
Freezer bins	3
LED bin lighting	•
Max Cold	•

Performance

ActiveSmart™ Foodcare	•
Adaptive defrost	•
Frost free	•
Humidity control system	•
Inverter controlled compressor	•
Sabbath mode	•
Triple evaporator	•
Variable temperature compartment	•

Product dimensions

Depth	747 mm
Height	1790 mm
Width	905 mm

Variable Temp Compartment

Bottle chill mode	•

SKU	27023

The product dimensions and specifications in this page apply to the specific product and model. Under our policy of continuous improvement, these dimensions and specifications may change at any time. You should therefore check with Fisher & Paykel's Customer Care Centre to ensure this page correctly describes the model currently available. © Fisher & Paykel Appliances Ltd 2020

Other product downloads available at fisherpaykel.com

- 2D-DWG
- 2D-DXF
- Care & Maintenance (English)
- Energy Label
- First Use (English)
- Installation Considerations (English)
- Installation Considerations
- Water Filter Replacement Instructions - Parts 847200 and 847201 (English)
- Installation Guide (English)
- Planning Guide (English)
- Revit21
- Rhino6
- Safety & Warnings (English)
- Sketchup8

Where applicable:

All appliances use energy, and energy usage typically generates carbon emissions. **Fisher & Paykel Appliances' In-use Energy Carbon Emissions Estimate** indicates carbon emissions from a product's in-use energy. This is calculated either annually or per cycle, using the product's market-specific energy label energy consumption data multiplied by the carbon emissions factor for energy in your country or region.

Our In-use Energy Carbon Emissions Estimate is designed to assist customers in making informed purchasing decisions when comparing different Fisher & Paykel products. For example, a heat pump dryer typically has a lower In-use Energy Carbon Emissions Estimate than a vented dryer.



A PEACE OF MIND SALE
24 Hours 7 Days a Week Customer Support

T 0800 372 273 **W**www.fisherpaykel.com