569L Series 7 French Door Refrigerator Freezer, Ice & Water

Series 7 | Contemporary

Stainless Steel | French hinge



You'll have plenty of flexible storage space in this striking, large capacity French Door refrigerator freezer.

- ActiveSmart™ technology helps keep food fresher for longer by constantly maintaining the ideal temperature.
- Spacious bottom freezer with full extension drawer gives easy access to frozen goods.
- Door water dispenser and internal ice maker

DIMENSIONS

Height	1790 mm
Width	900 mm
Depth	695 mm

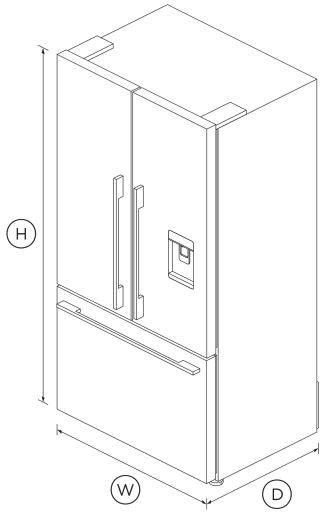

FEATURES & BENEFITS

ActiveSmart™ Foodcare

ActiveSmart™ Foodcare learns how you live. It's technology which understands how you use your refrigerator and adjusts temperature, airflow and humidity inside to help keep food fresher for longer.

Humidity Control

Your fruit and veges need different environments. The humidity control slides in each storage bin create a microclimate that helps keep food fresher for longer.

Ice Maker

Fresh ice is always available for you in a dedicated freezer bin. Simply turn it off to free up freezer space or during busy times, you can boost ice production by up to 30%.

Design Quality

Our fridges are designed and built using quality materials. We use real stainless steel on our fridges and solid glass for shelving.

Simple Storage

This refrigerator is designed to make it simple for you to store, access and remove food. Storage bins give you full access inside when they're pulled open and can be easily removed to clean. Our flexible shelving also gives you more storage options.

WATER ON TAP

The slimline dispenser makes it easy to fill almost any sized jug or vessel with cool filtered water and doesn't take up any storage space in your refrigerator.

Complementary Design

With their premium handle styling and stainless steel finish, our fridges are designed to match the rest of Fisher & Paykel's kitchen appliance family.

SPECIFICATIONS

Accessories (sold separately)

Water filter replacement	847200 - FWC3

Capacity

Total gross capacity	614 L
Volume	569 L
Volume freezer	152 L
Volume refrigerator	417 L

Consumption

Energy rating	3.5 star

Energy usage	433kWh/year (IEC 62552- 2015), 453kWh/year (AS/NZS 4474.2:2009)
In-use energy carbon emissions estimate	41.1kgCO2e/year (IEC 62552- 2015), 43.0kgCO2e/year (AS/NZS 4474.2:2009)

Features

Adjustable door shelves	6
Adjustable glass shelves	2
Cantilevered shelves	2
Covered door shelves	2
Door alarm	•
Fruit and vegetable bins	2
LED lighting	•
Smart appliance	•
SmartTouch control panel	•
Stackable bottle holders	4
Ultra slim water dispenser	•

Freezer Features

Automatic ice maker	•
Bottle chill	•
Door alarm	•
Fast freeze	•
Ice bin and scoop	•
Ice Boost	•
Large plastic bins	•
LED Lighting	•
Small plastic bins	•

Performance

ActiveSmart™ Foodcare	•
Adaptive defrost	•
Frost free freezer	•
Humidity control system	•
Inverter controlled compressor	•
R600a refrigerant	•
Sabbath mode	•

Power requirements

Rated current	10 A
Supply frequency	50 Hz
Supply voltage	230 V

Product dimensions

Depth	695 mm
Depth (including handles)	730 mm
Height	1790 mm
Height to top of cabinet	1790 mm
Minimum air clearance - each side	20 mm
Minimum air clearance - on top	50 mm
Width	900 mm

SKU	26501

The product dimensions and specifications in this page apply to the specific product and model. Under our policy of continuous improvement, these dimensions and specifications may change at any time. You should therefore check with Fisher & Paykel's Customer Care Centre to ensure this page correctly describes the model currently available. © Fisher & Paykel Appliances Ltd 2020

Other product downloads available at fisherpaykel.com

- DXF
- Archicad
- Data Sheet (English)
- DWG
- Energy Label
- Water Filter Replacement Instructions - Parts 847200 and 847201 (English)
- Water Filter Replacement Instructions - Parts 862285 and 862288 (English)
- Installation Guide (English)
- Revit
- Rhino
- SketchUp
- User Guide (English)

Where applicable:

All appliances use energy, and energy usage typically generates carbon emissions. **Fisher & Paykel Appliances' In-use Energy Carbon Emissions Estimate** indicates carbon emissions from a product's in-use energy. This is calculated either annually or per cycle, using the product's market-specific energy label energy consumption data multiplied by the carbon emissions factor for energy in your country or region.

Our In-use Energy Carbon Emissions Estimate is designed to assist customers in making informed purchasing decisions when comparing different Fisher & Paykel products. For example, a heat pump dryer typically has a lower In-use Energy Carbon Emissions Estimate than a vented dryer.

24/7

A PEACE OF MIND SALE
24 Hours 7 Days a Week Customer Support

T 0800 372 273 **W**www.fisherpaykel.com