60cm Series 5 Contemporary Oven, 7 Function

Series 5 | Contemporary

Stainless Steel



With generous capacity and beautiful contemporary styling, this built-in oven will complement your kitchen design perfectly.

- 85L total capacity
- Seven oven functions including Pizza Bake
- Optional non-tip, full-extension shelves for safe removal of hot dishes

DIMENSIONS

Height	598 mm
Width	597 mm
Depth	565 mm

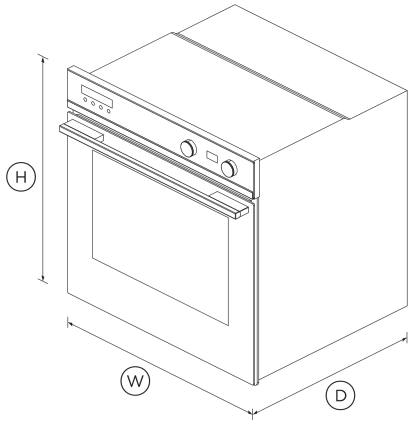

FEATURES & BENEFITS

Multi-Function Flexibility

This built-in oven has seven functions including Bake, Fan Bake and Pizza Bake, allowing you to use a variety of cooking styles.

Generous Capacity

With a generous sized internal cavity of 85L total capacity, you can create several dishes at once using multiple shelves.

Consistently Hot

Ideal for multi-shelf cooking, this built-in oven features AeroTech™ - a technology that circulates heat evenly.

Fast And Easy Cleaning

Cleaning this built-in oven is quick and easy thanks to the catalytic liners which absorb oil and fat splashes during cooking.

Refined Styling

With sophisticated handle styling and a white or brushed stainless steel finish, our built-in ovens are designed to match the rest of Fisher & Paykel's kitchen appliance family.

Safe And Sound

The CoolTouch door of this built-in oven is safe to touch from the outside. Sturdy, fully extendable shelves slide all the way out, reducing the need for you to reach inside.

SPECIFICATIONS

Accessories (included)

Chromed shelf runners	•
Roasting dish	1

Accessories (sold separately)

Handle kit Contemporary round, aluminium	Part 81645

Capacity

Shelf positions	6
Total capacity	85 L
Usable capacity	72 L

Cleaning

Acid resistant graphite enamel	•
Removable oven door	•
Removable oven door inner glass	•
Removable side ladders	•

Controls

Adjustable audio and display settings	•

Audio feedback	•
Automatic cooking/minute timer	•
Delay start	•
Electronic clock	•
Electronic oven control	•
Soft close doors	•
True convection oven	•

Functions

Bake	•
Classic bake	•
Fan bake	•
Fan forced	•
Fan grill	•
Grill	•
Number of functions	7
Pastry Bake with Pizza mode	•
Pizza bake	•

Performance

AeroTech™ technology	•
Grill power	3000 W
Whisper quiet cooking	•

Power requirements

Amperage	15 A
Supply frequency	50 Hz
Supply voltage	220 - 240 V

Product dimensions

Depth	565 mm
Height	598 mm
Width	597 mm

Safety

Balanced oven door	•
CoolTouch door	•
Non-tip shelves	•

SKU	83062

The product dimensions and specifications in this page apply to the specific product and model. Under our policy of continuous improvement, these dimensions and specifications may change at any time. You should therefore check with Fisher & Paykel's Customer Care Centre to ensure this page correctly describes the model currently available. © Fisher & Paykel Appliances Ltd 2020

Other product downloads available at fisherpaykel.com

- DXF
- Data Sheet (English)
- DWG
- Installation Guide (Chinese)
- Restriction of the Use of Hazardous Substances (Chinese)
- User Guide (Chinese)

Where applicable:

All appliances use energy, and energy usage typically generates carbon emissions. **Fisher & Paykel Appliances' In-use Energy Carbon Emissions Estimate** indicates carbon emissions from a product's in-use energy. This is calculated either annually or per cycle, using the product's market-specific energy label energy consumption data multiplied by the carbon emissions factor for energy in your country or region.

Our In-use Energy Carbon Emissions Estimate is designed to assist customers in making informed purchasing decisions when comparing different Fisher & Paykel products. For example, a heat pump dryer typically has a lower In-use Energy Carbon Emissions Estimate than a vented dryer.