Series 7, Contemporary Built-under Dishwasher

Series 7 | Contemporary

Stainless Steel



Offering a superior wash performance, this Dishwasher is designed to fit flush under your benchtop for a seamless look.

- Designed to be built under your benchtop, fitting flush with cabinetry for a seamless look
- Seven wash programs to suit any load, from Delicate to Heavy
- Quick, Sanitise and Extra Dry modifiers provide extra wash options
- Auto option senses the optimum wash cycle for your dishes

DIMENSIONS

Height	820 - 880 mm
Width	598 mm
Depth	574 mm

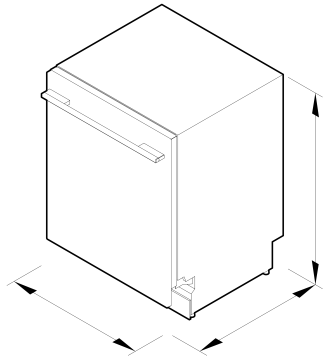

FEATURES & BENEFITS

Seamless Design

Install this dishwasher flush under your benchtop with the option of a custom kickstrip, ensuring minimal gaps. Designed to match our companion products for a seamless finish in your kitchen.

A Quality Wash

This dishwasher offers seven wash programs including Auto, which automatically senses the optimal wash cycle for your dishes. The three stage filtration system delivers a superior clean, while the rinse aid indicator reminds you to top up for squeaky-clean dishes.

Quick, Sanitise And Extra Dry Options

The Quick wash modifier delivers a faster wash while maintaining performance. The Sanitise option provides extra protection killing 99.9% of bacteria in the final rinse. The Extra Dry setting is perfect for those hard to dry plastic dishes.

Efficient Drying

ThermoDry technology removes moisture from the final hot rinse using natural condensation. The Extra Dry option can be added to selected wash cycles to further boost the drying performance.

Flexible Stacking

Designed to fit 15 place settings, the flexible, adjustable storage lets you stack large items with ease - featuring a full width cutlery tray, height adjustable middle rack, cup holders and wine glass supports.

Quiet & Reliable

Running at a very low decibel rating, this dishwasher does its job without making a fuss. The combination of clever technology and simple mechanics means greater reliability and superior wash performance.

Efficient Performance

This dishwasher delivers a powerful wash that ensures optimal results, with a 4 star energy rating and a 5.5 star water rating. Use the Delay Start option for up to 12 hours.

SPECIFICATIONS

Accessories (included)

Kickstrip	true

Capacity and loading

Accommodates round plates up to	300mm
Adjustable height, foldable cupracks	•
Easy lift adjustable upper basket	•
Fold down tines	•
Full width cutlery/utensil tray	•
Height adjustable rear wine glass supports	•

Pitch adjustable tines	•
Place settings	15
Place settings	15
Wine glass supports	•

Consumption

Energy rating	4 star
Energy usage	245kWh/year
In-use energy carbon emissions estimate	149.5kgCO2e/year
Water consumption (per wash cycle)	10.8L
Water rating	5.5 star (WELS)

Controls

End of cycle beeps	•
Energy saving delay start option of up to 12 hours	•
Floor light cycle feedback	•
Keylock	•
Rinse aid indicator light	•
Time remaining LED display	•

Features

Quiet operation	•
ThermoDry system	•
Three-stage filtration system	•
Variable wash pressure technology	•

Performance

Noise emissions	44 dBA

Power requirements

Dedicated Circuit (A)	10A
Supply frequency	50 Hz
Voltage	220 - 240V

Product dimensions

Depth	574 mm
Height	820 - 880 mm
Width	598 mm

Wash Program Modifiers

Extra Dry	•
Half load	•
Quick	•
Sanitise	•
Wash modifiers	4

Wash Programs

Auto	•
Delicate	•
Eco	•
Fast	•
Heavy	•
Medium	•
Rinse	•
Wash programs	7

Water connection

Water pressure	100kPa - 1000kPa
Water supply	3/4" BSP (20mm) Connector Water Inlet Hose

SKU 82158

The product dimensions and specifications in this page apply to the specific product and model. Under our policy of continuous improvement, these dimensions and specifications may change at any time. You should therefore check with Fisher & Paykel's Customer Care Centre to ensure this page correctly describes the model currently available. © Fisher & Paykel Appliances Ltd 2020

Other product downloads available at fisherpaykel.com

- Energy Label
- Installation Guide (English)
- Revit
- Rhino
- SketchUp
- User Guide (English)

Where applicable:

All appliances use energy, and energy usage typically generates carbon emissions. **Fisher & Paykel Appliances' In-use Energy Carbon Emissions Estimate** indicates carbon emissions from a product's in-use energy. This is calculated either annually or per cycle, using the product's market-specific energy label energy consumption data multiplied by the carbon emissions factor for energy in your country or region.

Our In-use Energy Carbon Emissions Estimate is designed to assist customers in making informed purchasing decisions when comparing different Fisher & Paykel products. For example, a heat pump dryer typically has a lower In-use Energy Carbon Emissions Estimate than a vented dryer.



A PEACE OF MIND SALE
24 Hours 7 Days a Week Customer Support

T 1300 650 590 Wwww.fisherpaykel.com