Series 5, Integrated Dishwasher

Integrated

Offering a superior wash performance, this Dishwasher is panel ready and designed to be integrated into your kitchen for a seamless look.

- Customize with your own front panel and handle to match your kitchen cabinetry
- Seven wash programs to suit any load, from Delicate to Heavy
- Quick, Sanitize and Extra Dry provide extra wash options
- Flexible racking allows you to customise internal shelves to suit your needs

DIMENSIONS

Height	32 5/16 - 36 1/2 "
Width	23 3/4 "
Depth	22 3/4 "

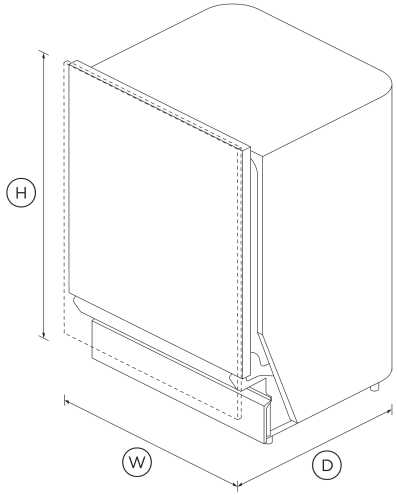

FEATURES & BENEFITS

Sized To Suit

Install this fully integrated dishwasher to tall (American size) or short (Euro/ADA size) counter heights, ensuring minimal gaps. Customize with a front panel to match kitchen cabinetry.

A Quality Wash

This dishwasher offers seven wash programs including Auto, which automatically senses the optimal wash cycle for your dishes. The three stage filtration system delivers a superior clean, while the rinse aid indicator reminds you to top up for squeaky-clean dishes.

Flexible Stacking

Designed to fit 14 place settings, the flexible, adjustable storage lets you stack even large items with ease - featuring a full width cutlery tray, height adjustable middle rack, cup holders and wine glass supports.

Quick, Sanitize And Extra Dry Options

A Quick wash modifier results in a faster clean, while maintaining wash performance. The Sanitize option provides extra protection killing 99.9% of bacteria in the final rinse. The Extra Dry setting is perfect for plastic dishes.

Quiet And Reliable

Running at a very low decibel rating, this dishwasher does its job without making a fuss. The combination of clever technology and simple mechanics means greater reliability and superior wash performance.

Efficient Performance

This dishwasher is very efficient in its use of water and energy, while delivering a powerful wash that ensures optimal results.

SPECIFICATIONS

Accessories (included)

Kickstrip	true

Accessories (sold separately)

Door panel stainless steel	AD-DW ADA
Handle kit Classic	AHCL-DDDW-24X
Handle kit Contemporary brushed black	AHD7DDDW60B
Handle kit Contemporary brushed silver	AHD7DDDW60S
Handle kit Contemporary round, aluminium	AHS-OBDD-60S
Handle kit Contemporary square fine, aluminium	AHD5-OBDD-60SX
Handle kit Contemporary square fine, black	AHD5-OBDD-60SB
Handle kit Contemporary square, aluminium	AHD3-OBDD-60S
Handle kit Contemporary square, black	AHD3-OBDD-60B

Handle kit Minimal black	AHM1DDDW60B
Handle kit Minimal grey	AHM1DDDW60G
Handle kit Professional round flush	AHP3-DWDD-SX
Handle kit Professional round flush, Brass off-stands	AHP3DDDW24BA
Handle kit Professional round flush, Dark Copper off-stands	AHP3DDDW24DC

Capacity and loading

Accommodates round plates up to	10 1/4"
Fold down tines	•
Full width cutlery/utensil tray	•
Height adjustable rear wine glass supports	•
Pitch adjustable tines	•
Place settings	14
Place settings	14
Wine glass supports	•

Consumption

Energy rating	Energy Star
Energy usage	232kWh/year
In-use energy carbon emissions estimate	26.7kgCO2e/year
Water usage (per wash cycle)	3 gal

Controls

End of cycle beeps	•
Energy saving delay start option of up to 12 hours	•
Floor light cycle feedback	•
Keylock	•
Rinse aid indicator light	•

Features

Quiet operation	•
ThermoDry system	•
Three-stage filtration system	•
Variable wash pressure technology	•

Performance

Noise emissions	46 dBA

Power requirements

Dedicated Circuit (A)	10A
Supply frequency	50 Hz
Voltage	110 - 120V

Product dimensions

Depth	22 3/4 "
Height	32 5/16 - 36 1/2 "
Width	23 3/4 "

Safety and compliance

ADA compliant	•

Wash Program Modifiers

Extra Dry	•
Half load	•
Quick	•
Sanitise	•
Wash modifiers	4

Wash Programs

Auto	•
Delicate	•
Eco	•
Fast	•
Heavy	•
Medium	•
Rinse	•
Wash programs	7

Water connection

Water pressure	100kPa - 1000kPa

SKU	81872

The product dimensions and specifications in this page apply to the specific product and model. Under our policy of continuous improvement, these dimensions and specifications may change at any time. You should therefore check with Fisher & Paykel's Customer Care Centre to ensure this page correctly describes the model currently available. © Fisher & Paykel Appliances Ltd 2020

Other product downloads available at fisherpaykel.com

- DXF
- DWG
- Energy Label
- Energy Label
- Installation Guide (English)
- Installation Guide (Canadian French)
- Right To Repair Declaration (English, Canadian French)
- User Guide (English)
- User Guide (Canadian French)

Where applicable:

All appliances use energy, and energy usage typically generates carbon emissions. Fisher & Paykel Appliances' In-use Energy Carbon Emissions Estimate indicates carbon emissions from a product's in-use energy. This is calculated either annually or per cycle, using the product's market-specific energy label energy consumption data multiplied by the carbon emissions factor for energy in your country or region.

Our In-use Energy Carbon Emissions Estimate is designed to assist customers in making informed purchasing decisions when comparing different Fisher & Paykel products. For example, a heat pump dryer typically has a lower In-use Energy Carbon Emissions Estimate than a vented dryer.

24/7

A PEACE OF MIND SALE
24 Hours 7 Days a Week Customer Support

T 1.888.936.7872 Wwww.fisherpaykel.com