511L Series 7 French Door Refrigerator Freezer

Series 7 | Contemporary

Stainless Steel | French hinge



With generous storage tailored for fresh produce and a sleek, contemporary design, this French Door Refrigerator is a seamless fit for any kitchen.

- Recessed handles create a sleek, modern look to complement any kitchen design
- Extra fridge space and dual humidity bins offer plenty of room for fresh produce and deli items
- ActiveSmart™ technology maintains the ideal temperature to help keep food fresher for longer
- Spacious bottom freezer with full extension drawers gives easy access to frozen goods

DIMENSIONS

Height	1725 mm
Width	790 mm
Depth	707 mm

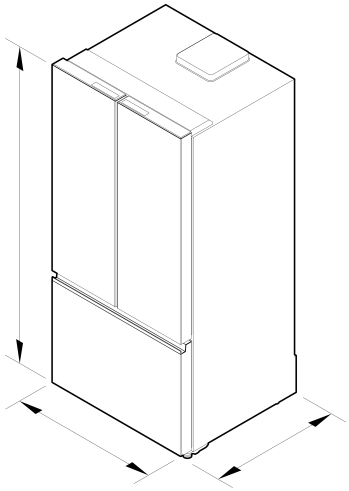

FEATURES & BENEFITS

Complementary design

Recessed handles and flat doors create a sleek, streamlined look that blends seamlessly with any kitchen aesthetic. Finished in stainless steel to complement a wide range of kitchen styles.

Ample fresh storage

Designed for those who prioritise fresh food, this refrigerator features a 70:30 fridge-freezer split, offering extra fridge space and an additional humidity-controlled drawer. Ideal for storing fresh produce or separating deli items and meats, it ensures everything has its place.

Dual humidity drawers

Two full-width humidity-controlled drawers create ideal microclimates to keep fruits and vegetables fresher for longer, ensuring your produce stays crisp and delicious.

ActiveSmart™ Foodcare

ActiveSmart™ Foodcare technology responds to everyday use by adjusting airflow, temperature, and humidity to help keep food fresher for longer.

Clever energy

Your refrigerator adapts to daily use by cooling and defrosting only when necessary. This ensures energy is used efficiently without compromising food care.

Design quality

Our refrigerators are designed and built using robust, quality materials, with stainless steel exteriors and solid glass for the interior shelving.

Easy cleaning

Spill-safe secure glass shelves easily capture any drips or leaks and prevent them from falling on items below.

SPECIFICATIONS

Capacity

Volume	511 L
Volume freezer	140 L
Volume refrigerator	371 L

Consumption

Energy rating	5 star

Energy usage	312 kWhr/year
In-use energy carbon emissions estimate	29.6kgCO2e/year

Controls

Electronic interface	•

Features

Adjustable glass shelves	2
Adjustable half width door shelves	8
Door alarm	•
Front levelling feet	•
Fruit and vegetable bins	2
Keylock	•
LED lighting	•
Rapid cool function	•

Freezer Features

Bottle chill	•
Fast freeze	•

Performance

ActiveSmart™ technology	•
Adaptive defrost	•
Eco friendly R600a refrigerant	•
Frost free	•
Humidity control system	•
Humidity controlled crisper bins	2
Sabbath mode	•

Power requirements

Rated current	10 A
Supply frequency	50 Hz
Supply voltage	220-240 V

Product dimensions

Depth	707 mm
Height	1725 mm
Width	790 mm

SKU	26999

The product dimensions and specifications in this page apply to the specific product and model. Under our policy of continuous improvement, these dimensions and specifications may change at any time. You should therefore check with Fisher & Paykel's Customer Care Centre to ensure this page correctly describes the model currently available. © Fisher & Paykel Appliances Ltd 2020

Other product downloads available at fisherpaykel.com

- DXF
- DWG
- Energy Label
- Installation Guide (English)
- Planning Guide (English)
- Revit
- Rhino
- SketchUp
- User Guide (English)

Where applicable:

All appliances use energy, and energy usage typically generates carbon emissions. **Fisher & Paykel Appliances' In-use Energy Carbon Emissions Estimate** indicates carbon emissions from a product's in-use energy. This is calculated either annually or per cycle, using the product's market-specific energy label energy consumption data multiplied by the carbon emissions factor for energy in your country or region.

Our In-use Energy Carbon Emissions Estimate is designed to assist customers in making informed purchasing decisions when comparing different Fisher & Paykel products. For example, a heat pump dryer typically has a lower In-use Energy Carbon Emissions Estimate than a vented dryer.

24/7

A PEACE OF MIND SALE
24 Hours 7 Days a Week Customer Support

T 0800 372 273 Wwww.fisherpaykel.com