90cm Series 5 Classic 5 Burner Dual Fuel Cooker

Series 5 | Classic

Stainless Steel



Get the best of both worlds with dual fuel. A gas cooktop with wok burner is paired with a seven-function convection oven.

- Five burner gas cooktop, with precise heat control
- Convection oven with 140L total capacity and seven oven functions
- Optional non-tip full-extension shelves for safe removal of hot dishes

DIMENSIONS

Height	898 - 946 mm
Width	897 mm
Depth	600 mm

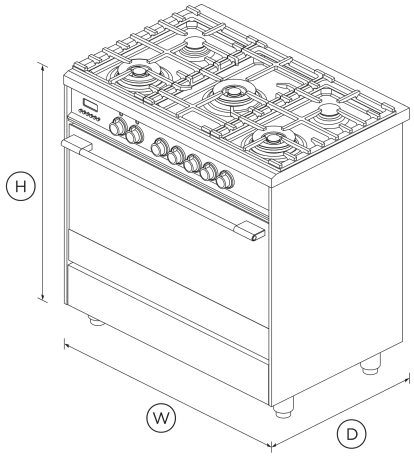

FEATURES & BENEFITS

Quality And Durability

Every detail has been carefully crafted, from the solid balanced door to the durable cooktop trivets and large capacity oven.

Impressive Capacity

With an extra large 140L capacity, this range has plenty of space for cooking multiple dishes at the same time.

Burner Power & Control

Instant and immediate control from the highest to the gentlest heat. The finely tuned cooktop controls let you sear and stir fry over powerful heat, or simmer a delicate sauce to perfection.

Even Heat

Dishes on the top shelf turn out as perfectly as the ones on the bottom, due to our AeroTech™ convection system that circulates air evenly throughout the entire oven.

Easy To Clean

Your cooktop simply needs a quick wipe to keep it looking good as new, as the gas cooktop is made from a single piece of stainless steel that contains spills. The oven door, its inner pane of glass and runners can also be removed for easy cleaning.

Safe And Sound

The door and cavity cooling system keeps the heat on the inside, protecting your hands and surrounding cabinetry. The flame failure safety device automatically turns off the gas if the flame is accidentally extinguished.

SPECIFICATIONS

Accessories (included)

Chromed shelf runners	1 set
Flat wire shelf	1
Roasting dish	1
Small pot support	1 (part 533981)
Square foot covers, stainless steel	1
Step down wire shelf	•

Accessories (sold separately)

Full extension sliding shelves	Optional (part 578744)
Kick strip, stainless steel (optional)	KICKOR90X1

Burner ratings

Auxiliary burner (LPG)	3.9MJ/h
Auxiliary burner (natural gas)	3.9MJ/h
Maximum burner power	16.2MJ/h
Rapid burner (LPG)	11.8MJ/h
Rapid burner (natural gas)	11.5MJ/h
Semi-rapid burner (LPG) x2	5.8MJ/h
Semi-rapid burner (natural gas) x2	6.5MJ/h

Total cooktop power	44.6MJ/h
Wok burner (LPG)	14.9MJ/h
Wok burner (natural gas)	16.2MJ/h

Capacity

Shelf positions	6
Shelf positions (main oven)	6
Total capacity	140 L
Usable capacity	121 L
Usable capacity (main oven)	121 L

Cleaning

Acid resistant graphite enamel	•
Drop down grill element	•
Removable oven door	•
Removable oven door inner glass	•
Removable shelf runners	•

Controls

Audio feedback	•
Automatic cooking/minute timer	•
Celsius/Fahrenheit temperature	•
Electronic clock	•
Laser etched graphics	•
Turned stainless steel clock buttons	•

Installation Dimensions

Installation cutout dimensions (Depth)	600 mm
Installation cutout dimensions (Width)	900 mm

Oven features

AeroTech™ technology	•
Storage compartment	•
True convection	•
Twin cavity fans	•

Oven functions

Bake	•
Defrost	•
Fan bake	•
Fan forced	•
Fan grill	•
Grill	•
Number of functions	7
True convection	•
Warm	•

Oven performance

CoolTouch door	Double glazed

Power requirements

Amperage	14 A
Supply frequency	50 Hz
Supply voltage	220 - 240 V

Product dimensions

Depth	600 mm
Height	898 - 946 mm
Width	897 mm

Rangetop features

Hob rear trim	60 mm
LPG / Natural Gas compatible	•
Sealed range top	•

Safety

Advanced cooling system	•
Anti-tilt bracket	•
Balanced oven door	•
CoolTouch door	•
Flame failure system	•
Full extension telescopic shelves	Optional (part 578744)
Non-tip shelves	•
Spill containment	26 L

SKU	81678

The product dimensions and specifications in this page apply to the specific product and model. Under our policy of continuous improvement, these dimensions and specifications may change at any time. You should therefore check with Fisher & Paykel's Customer Care Centre to ensure this page correctly describes the model currently available. © Fisher & Paykel Appliances Ltd 2020

Other product downloads available at fisherpaykel.com

- Installation Guide (English)
- Installation Guide - Kick Strip (English)
- Revit
- Rhino
- SketchUp
- User Guide (English)

Where applicable:

All appliances use energy, and energy usage typically generates carbon emissions. **Fisher & Paykel Appliances' In-use Energy Carbon Emissions Estimate** indicates carbon emissions from a product's in-use energy. This is calculated either annually or per cycle, using the product's market-specific energy label energy consumption data multiplied by the carbon emissions factor for energy in your country or region.

Our In-use Energy Carbon Emissions Estimate is designed to assist customers in making informed purchasing decisions when comparing different Fisher & Paykel products. For example, a heat pump dryer typically has a lower In-use Energy Carbon Emissions Estimate than a vented dryer.



A PEACE OF MIND SALE
24 Hours 7 Days a Week Customer Support

T 0800 372 273 **W**www.fisherpaykel.com