60cm Series 9 Contemporary Built-in Coffee Maker

Series 9 | Contemporary

Stainless Steel



Our built-in coffee maker pours a delicious coffee, however you take it. Pairs perfectly with 60cm ovens and companion products.

- Barista-standard coffee just the way you like it, with 13 options from Flat White to Latte or Americano
- Your favourite coffee can be memorized and set to start at the same time each day, so it's ready when you are
- With self-cleaning function for an effortless clean
- Part of our suite of companion products, designed to match aesthetically for flexible configurations.

DIMENSIONS

Height	458 mm
Width	596 mm
Depth	480 mm

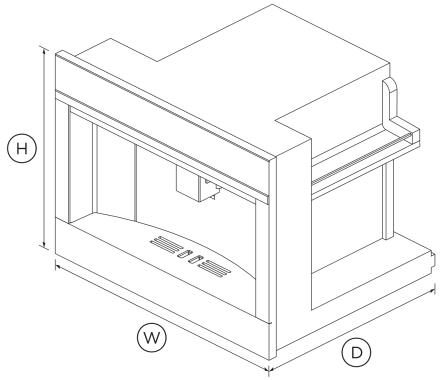

FEATURES & BENEFITS

Coffee Choice

Your Coffee Maker has 13 different choices to suit your taste and selection – from Espresso to Latte and more.

Self-Cleaning

The Coffee Maker has a self-cleaning function. It comes with a removable drip tray and a waste container for used coffee grounds.

Seamless Integration

Finished in black reflective glass with a polished metal trim, this Coffee Maker matches the other companion products and the rest of the Fisher & Paykel kitchen family.

Personalise Your Cup

Program an automatic setting to start up at the same time each day and memorise your favourite coffee. Twin LED lights illuminate your beverages so you can see what you are doing on those dark mornings.

Sized To Suit

This 60cm Built-in Coffee Maker is perfect for the compact kitchen and can be placed virtually anywhere. All companion products can be installed at a convenient height to suit your kitchen design and preference.

BARISTA-STYLE COFFEE

The conical burr grinder delivers a consistent grind for the perfect coffee. Set it to suit your preference.

SPECIFICATIONS

Accessories (included)

Coffee spoon	•
Descaling agent bottle	•
Extractable steam outlet	•
Thermal milk jug (Auto Cappuccino)	0.5 L
Water filter	•

Accessories (sold separately)

Matching Trim Kit	Optional 76cm trim kit Part 81883
Optional lower trim kit	Part 81662

Capacity

Coffee bean container capacity	350 g

Drip tray capacity	0.8 L
Grounds container capacity	14 cups of coffee
Number of cups	1 or 2
Water tank capacity	2.5 L

Cleaning

Easy to remove coffee grinds container	•
Easy to remove stainless steel hot water/ steam pipe	•
Removable drip tray with level indicator	•
Self-clean function	•

Controls

Cleaning reminder	•
Coffee grounds full reminder	•
High resolution touch display	•
Intuitive information display	•
LED lights	4
Multi-language interface	true
Refill coffee bean reminder	•
Water tank empty indicator	•

Features

Coffee strength levels	5
Cup size levels	4 + manual
Personalised coffee	•
Takes pre ground coffee	•

Functions

Americano	•
Cappuccino	•
Coffee	•
Double espresso	•
Espresso	•
Espresso macchiato	•
Flat white	•
Hot milk	•
Hot water	•
Latte	•
Latte macchiato	•
Long black	•

Performance

Coffee temperatures	5 x setting
Grinder	Stainless steel conical burr
Grinding coarseness	13 positions
Heating system	Thermablock with stainless steel tube & steamer
Integrated cup warmer shelf	•
Integrated storage for accessories	•
Pump power	50 W
Pump pressure	15 bar

Power requirements

Amperage	10 A
Supply frequency	50 Hz
Supply voltage	220-240 V

Product dimensions

Depth	480 mm
Height	458 mm
Width	596 mm

SKU 82298

The product dimensions and specifications in this page apply to the specific product and model. Under our policy of continuous improvement, these dimensions and specifications may change at any time. You should therefore check with Fisher & Paykel's Customer Care Centre to ensure this page correctly describes the model currently available. © Fisher & Paykel Appliances Ltd 2020

Other product downloads available at fisherpaykel.com

- DXF
- Archicad
- Archicad - 600mm Trim
- Archicad - 760mm Trim
- Data Sheet (English)
- DWG
- Installation Guide (Chinese)
- Revit
- Revit - 600mm Trim
- Revit - 760mm Trim
- Rhino
- Rhino - 600mm Trim
- Rhino - 760mm Trim
- Restriction of the Use of Hazardous Substances (Chinese)
- Restriction of the Use of Hazardous Substances (Chinese)
- SketchUp
- SketchUp - 600mm Trim
- SketchUp - 760mm Trim
- User Guide (English)

Where applicable:

All appliances use energy, and energy usage typically generates carbon emissions. **Fisher & Paykel Appliances' In-use Energy Carbon Emissions Estimate** indicates carbon emissions from a product's in-use energy. This is calculated either annually or per cycle, using the product's market-specific energy label energy consumption data multiplied by the carbon emissions factor for energy in your country or region.

Our In-use Energy Carbon Emissions Estimate is designed to assist customers in making informed purchasing decisions when comparing different Fisher & Paykel products. For example, a heat pump dryer typically has a lower In-use Energy Carbon Emissions Estimate than a vented dryer.