Series 9, Integrated Tall Dishwasher

Integrated

Designed to integrate seamlessly into your cabinetry, this tall dishwasher delivers superior wash performance and advanced drying.*

- Customise with your own front panel and handle to match your kitchen cabinetry
- Eight wash programs from Heavy to Light, including Auto, 60min and Glassware
- Dry+, Sanitise, Half Load and Intensive modifiers provide extra wash options
- Wi-Fi enabled and works with the SmartHQ™ app for remote control and notifications

DIMENSIONS

Height	857 - 917 mm
Width	597 mm
Depth	554 mm

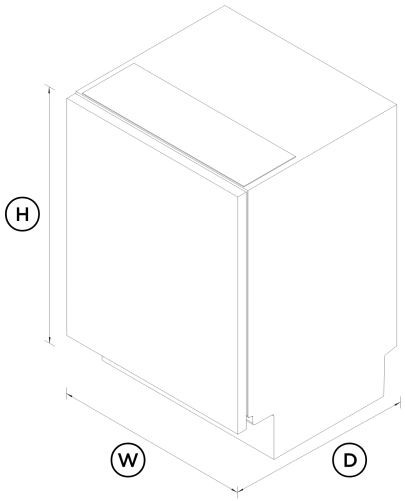

FEATURES & BENEFITS

Seamless Integration

Customise your dishwasher with a panel and handle matching your cabinetry, for a seamless finish in your kitchen.

Advanced Drying

For beautifully dry dishes every time, this dishwasher features an advanced drying system. It combines fan-assisted drying with an automatic door opening at the cycle's end. The Auto Door Open Dry feature releases excess steam, ensuring dishes are immediately ready for use or storage. An innovative air curtain channels the steam away from the adjacent benchtop, protecting your cabinetry.

An Exceptional Clean

This dishwasher offers eight wash programs including Glassware and Auto, which automatically senses the optimal wash settings for your dishes. The three-stage filtration system delivers a superior clean, while the rinse aid indicator reminds you to top up for beautifully clean dishes.

Customise Your Wash

Create the perfect wash with our range of modifiers, from Intensive for a thorough clean to Half Load, ideal for a partial load. The Sanitise modifier provides extra protection, killing 99.9% of bacteria* in the final rinse, while Dry+ is great for plastic dishes. *Certified to NSF/ANSI Standard 184

Quiet Performer

Running at a very low decibel rating, this dishwasher does its job without making a fuss. The combination of clever technology and simple mechanics means greater reliability and superior wash performance, with minimal noise.

Efficient Performance

With a 4.5 star energy rating and 5.5 star water rating, this dishwasher delivers a powerful wash. Use the Eco wash program for optimal water and energy consumption, or choose when the cycle begins with Delay Start.

Flexible Loading

Designed to fit 15 place settings, the tall height of this model lets you stack large items with ease. Adjustable racking provides flexibility for any load, with a full-width cutlery tray, height-adjustable middle rack, cup holders and wine glass supports.

SPECIFICATIONS

Accessories (included)

Cutlery basket	•

Accessories (sold separately)

Door panel black stainless steel	ADDW60PB
Door panel stainless steel	ADDW60PX
Handle kit Contemporary brushed black	AHD7DDDW60B

Handle kit Contemporary brushed silver	AHD7DDDW60S
Handle kit Contemporary round, aluminium	AHS-OBDD-60S
Handle kit Contemporary square fine, aluminium	AHD5-OBDD-60SX
Handle kit Contemporary square fine, black	AHD5-OBDD-60SB
Handle kit Contemporary square, aluminium	AHD3-OBDD-60S
Handle kit Contemporary square, black	AHD3-OBDD-60B
Handle kit Minimal black	AHM1DDDW60B
Handle kit Minimal grey	AHM1DDDW60G

Capacity and loading

Accommodates round plates up to (lower basket)	325mm
Accommodates round plates up to (top basket)	220mm (with cutlery tray)
Adjustable height, foldable cupracks	•
Easy lift adjustable upper basket	•
Fold down tines	•
Full width cutlery/utensil tray	•
Height adjustable rear wine glass supports	•
Large crockery insert in lower basket	•
Place settings	15
Telescopic slides	•
Wine glass supports with stemware grippers	•

Connected Features

Alerts and notifications	•
Education and onboarding	•
Monitoring	•
Remote operation	•
Software updates	•

Consumption

Water efficiency (WELS) rating	3 ticks

Controls

Energy saving delay start option of up to 12 hours	•
Floor light cycle feedback	•
Internal light	•
Internal wash selector	•
Keylock	•
Rinse aid indicator light	•

Features

Air curtain for bench protection	•
Aquastop	•
Auto Door Open Dry	•
Fan assisted drying	•
Flood protection	•
Fully independent spray arms	•
Half load option	•
Internal tub material	Stainless Steel
Motor type	BLDC
Three-stage filtration system	•
Variable wash pressure technology	•

Performance

Noise emissions	42 dBA

Power requirements

Dedicated Circuit (A)	10A
Supply frequency	50 Hz
Voltage	220 - 240V

Product dimensions

Depth	554 mm
Height	857 - 917 mm
Width	597 mm

Wash Program Modifiers

Dry +	•
Half load	•
Intensive	•
Sanitise	•
Wash modifiers	4

Wash Programs

60 min	•
Auto	•
Eco	•
Glassware	•
Heavy	•
Light	•
Medium	•
Rinse	•
Wash programs	8

Water connection

Water pressure	30kPa - 1000 kPa
Water supply	3/4" BSP (20mm) Connector Water Inlet Hose

SKU 82440

The product dimensions and specifications in this page apply to the specific product and model. Under our policy of continuous improvement, these dimensions and specifications may change at any time. You should therefore check with Fisher & Paykel's Customer Care Centre to ensure this page correctly describes the model currently available. © Fisher & Paykel Appliances Ltd 2020

Other product downloads available at fisherpaykel.com

- Door Template (English)
- Energy Label
- Installation Guide (English)
- Planning Guide (English)
- User Guide (English)
- Wash Program Data (English)
- Water Efficiency Label

Where applicable:

All appliances use energy, and energy usage typically generates carbon emissions. **Fisher & Paykel Appliances' In-use Energy Carbon Emissions Estimate** indicates carbon emissions from a product's in-use energy. This is calculated either annually or per cycle, using the product's market-specific energy label energy consumption data multiplied by the carbon emissions factor for energy in your country or region.

Our In-use Energy Carbon Emissions Estimate is designed to assist customers in making informed purchasing decisions when comparing different Fisher & Paykel products. For example, a heat pump dryer typically has a lower In-use Energy Carbon Emissions Estimate than a vented dryer.

24/7

A PEACE OF MIND SALE
24 Hours 7 Days a Week Customer Support
T +65 6741 0777 Wwww.fisherpaykel.com