602L Series 7 French Door Refrigerator Freezer, Precision Fit, Autofill Pitchers, Dual Ice Makers

Series 7 | Minimal

Grey Glass | French hinge



This French Door Refrigerator Freezer is the pinnacle of refined design and everyday flexibility. Precision Fit reduces visual gaps for closer alignment with cabinetry, while the Autofill Pitchers, Dual Ice Makers and Variable Temperature Drawer combine refined design, intelligent technology, and flexible food care together in one considered appliance.

- Precision Fit allows for reduced gaps around the refrigerator and closer alignment with cabinetry
- Two Autofill Pitchers in the door provide a total of 2.6L capacity, ideal for taking to the table or filling bottles
- Two independent automatic ice makers in the freezer produce Cube and Pebble ice
- Variable Temperature Drawer with Meat & Seafood, Fruit & Vegetable and Beverage modes
- Connect with Wi-Fi and the SmartHQ™ app to receive notifications and guides

DIMENSIONS

Height	1790 mm
Width	905 mm
Depth	690 mm

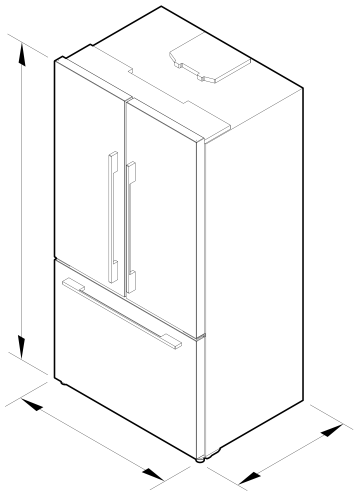

FEATURES & BENEFITS

REFINED DESIGNED WITH PRECISION FIT

The pinnacle of our Freestanding French Door collection, this refrigerator brings together refined kitchen design and everyday versatility. Our Precision Fit innovation reduces the visual gaps around the refrigerator and enables a closer alignment with cabinetry while maintaining unrestricted door opening. Engineered for precise and lasting alignment, it delivers a new level of design freedom with all the benefits of freestanding refrigeration. Inside, two Autofill Pitchers provide fresh, filtered water on demand, a Dual Ice Maker ensures a constant supply of ice, and a Variable Temperature Drawer adapts to suit different ingredients and storage needs.

CONNECTED CARE FOR LASTING PERFORMANCE

Ongoing care is key to maintaining performance over time. With Wi-Fi and the SmartHQ™ app, you can access software updates and guides, monitor your water filter, and receive replacement reminders, with the option to subscribe for automatic filter delivery, with 10% off and free delivery on every order.

THE PERFECT POUR

Ready when you are, two Autofill Pitchers hold a total of 2.6L of chilled, filtered water. Stored in the door and automatically replenished, they’re perfect for taking to the table or filling bottles. Combined with the internal water dispenser reservoir, this refrigerator offers a total of 3.6L of chilled water - the largest cold water capacity in our Freestanding range.

ICE FOR EVERY OCCASION

From a quiet drink to hosting guests, different moments call for different ice. Cube ice holds its shape for a slower chill, while Pebble ice creates more surface area to cool drinks quickly and blend easily into cocktails. Two independently controlled ice makers adapt to your needs, producing either ice type on demand, while the flexibility to run a single ice maker or remove a bin creates more usable freezer space when required.

CONSIDERED DESIGN

Food storage is most effective when frequently used items are easy to access and clearly visible. A magnetic latch on the top freezer drawer brings items forward when the door is opened, giving easier access to frequently used items. Full extensions runners improve visibility and help protect produce from being damaged during storage, while removable bins make cleaning and maintenance simple. In a Grey Glass finish to match our Minimal style appliances and create a cohesive kitchen suite.

OPTIMAL COOLING CLIMATES

Shaped by our deep understanding of the science of food preservation, the Variable Temperature Drawer inside the refrigerator provides the optimal climate for different ingredients. With Meat & Seafood, Beverage, and Fruit & Vegetable modes, it offers a dedicated storage environment designed to preserve freshness, flavour, and quality.

EXTENDED FRESHNESS WITH HUMIDITY CONTROL

Optimal humidity is fundamental to the preservation of fruits and vegetables. Our Humidity Control Bins with grooved lids are tested by our team of food scientists to maintain ideal humidity levels. Proven to store fruit and vegetables fresher for up to 6 times longer* than on the main shelf, preserving the flavour, nutrients and texture of your produce. *Based on internal testing, according to IEC 63169:2020/A1:2025

ENGINEERED FOR LIFE

Refrigerators need to endure years of daily use. Designed for reliable performance, our models are life-tested beyond standard safety requirements, with each door shelf impact-tested over 70,000 times to ensure lasting durability.

SPECIFICATIONS

Accessories (sold separately)

Water filter replacement	FPWF1

Capacity

Volume	602 L
Volume freezer	187 L
Volume refrigerator	415 L

Consumption

Energy rating	E
Energy usage	303kWh/year

Features

Adjustable door shelves	4
Adjustable glass cantilevered shelves	•
Cantilevered glass shelves	2
Door alarm	•
Fruit and vegetable bins	2
LED bin lighting	•
LED ceiling lighting	•
Precision fit	•
Variable temperature drawer	•

Freezer Features

Automatic ice maker	•
Bottle chill	•
Door alarm	•
Freezer bins	3
Ice bin and scoop	•
Ice Boost	•
LED bin lighting	•
Max Cold	•

Installation Dimensions

Minimum inside width of cabinetry frame	925 mm
Minimum internal depth of cabinetry	700 mm
Minimum internal height of cabinetry	1800 mm

Performance

ActiveSmart™ Foodcare	•
Adaptive defrost	•
Frost free	•
Humidity control system	•
Inverter controlled compressor	•
Sabbath mode	•
Variable Temperature Compartment Performance	•

Power requirements

Supply voltage	230 V

Product dimensions

Depth	690 mm
Height	1790 mm
Minimum air clearance - each side	10 mm
Minimum air clearance - on top	10 mm
Width	905 mm

SKU	27085

The product dimensions and specifications in this page apply to the specific product and model. Under our policy of continuous improvement, these dimensions and specifications may change at any time. You should therefore check with Fisher & Paykel's Customer Care Centre to ensure this page correctly describes the model currently available. © Fisher & Paykel Appliances Ltd 2020

Other product downloads available at fisherpaykel.com

- DWG
- DXF
- Care & Maintenance (English)
- First Use Guide (English)
- Installation Considerations (English UK)
- Water Filter Replacement Instructions - Parts 847200 and 847201 (English)
- Installation Guide (English)
- Planning Guide (English)
- Revit
- Rhino
- Safety & Warnings (English)
- SketchUp

Where applicable:

All appliances use energy, and energy usage typically generates carbon emissions. **Fisher & Paykel Appliances' In-use Energy Carbon Emissions Estimate** indicates carbon emissions from a product's in-use energy. This is calculated either annually or per cycle, using the product's market-specific energy label energy consumption data multiplied by the carbon emissions factor for energy in your country or region.

Our In-use Energy Carbon Emissions Estimate is designed to assist customers in making informed purchasing decisions when comparing different Fisher & Paykel products. For example, a heat pump dryer typically has a lower In-use Energy Carbon Emissions Estimate than a vented dryer.



A PEACE OF MIND SALE
24 Hours 7 Days a Week Customer Support

T 08000 886 605 Wwww.fisherpaykel.com