Series 9 Integrated Single DishDrawer Dishwasher

Integrated

Introducing the next evolution of DishDrawer™ Dishwasher design. The Integrated Single DishDrawer™ Dishwasher delivers advanced performance, quiet efficiency and true half-load dish care. Designed to integrate seamlessly within your kitchen cabinetry, it gives you the freedom to shape your space around the way you cook and connect. New wash technology offers a step up in energy and water efficiency, engineered for real life and shaped by decades of DishDrawer™ Dishwasher innovation.

- Perfect for compact kitchens, with a small footprint that's quick to fill and easy to load
- Capacitive touch controls, refined styling and SmartHQ™ connectivity bring intuitive convenience to everyday dish care
- Adaptable racking and versatile wash cycles provide flexibility, with fan-assisted drying for clean, dry dishes
- Holds a true half load, ideal for quick turnaround of dishes with convenient bench-height access

DIMENSIONS

Height	410 mm
Width	599 mm
Depth	553 mm

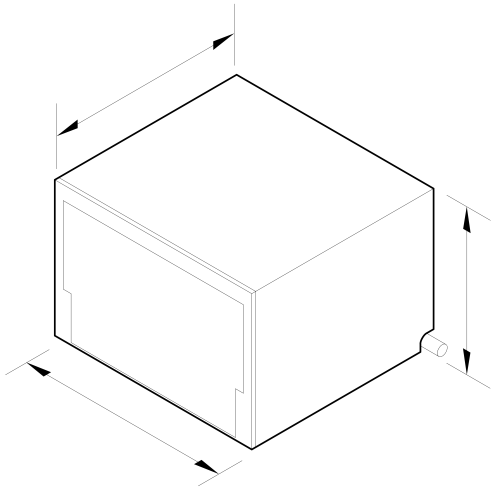

SPECIFICATIONS

Accessories (included)

Cutlery basket	•

Accessories (sold separately)

Door panel black stainless steel	ADDD60SPB
Door panel stainless steel	ADDD60SPX
Handle kit Contemporary brushed black	AHD7DDDW60B
Handle kit Contemporary brushed silver	AHD7DDDW60S
Handle kit Contemporary square, black	AHD3-OBDD-60B
Handle kit Minimal black	AHM1DDDW60B
Handle kit Minimal grey	AHM1DDDW60G

Capacity and loading

Accommodates round plates up to	280mm
Adjustable height, foldable cupracks	•
Fold down tines	•
Pitch adjustable tines	•
Place settings	6
Wine glass supports	•

Connected Features

Alerts and notifications	•
Consumable subscription	•
Education and onboarding	•
Energy consumption monitoring	•
Monitoring	•
Remote operation	•
Software updates	•

Consumption

Energy rating	C

Controls

Black touch concealed interface	•
Electronic fault/Diagnostic indicator	•
End of cycle beeps	•
Energy saving delay start option of up to 12 hours	•
Keylock	•
Knock to pause	•
Rinse aid indicator light	•
Smart appliance	•

Features

Advanced filtration	•
Built-in water softener	•
Fan assisted drying	•
Flood protection	•
Flow through detergent dispenser	•
Motor type	BLDC
Quiet operation	•
SmartDrive™ technology	•
Soft close drawer	•
Three-stage filtration system	•
Variable wash pressure technology	•

Performance

Noise emissions	43 dBA

Power requirements

Dedicated Circuit (A)	10A
Supply frequency	50 Hz
Voltage	220 - 240V

Product dimensions

Depth	553 mm
Height	410 mm
Width	599 mm

Wash Program Modifiers

Dry +	•
Gentle	•
Intensive	•
Wash modifiers	3

Wash Programs

60 min	•
Eco	•
Heavy	•
Hygiene	•
Light	•
Medium	•
Wash programs	6

Water connection

Water pressure	30kPa - 1000 kPa
Water supply	3/4" BSP (20mm) Connector Water Inlet Hose

SKU	85776

The product dimensions and specifications in this page apply to the specific product and model. Under our policy of continuous improvement, these dimensions and specifications may change at any time. You should therefore check with Fisher & Paykel's Customer Care Centre to ensure this page correctly describes the model currently available. © Fisher & Paykel Appliances Ltd 2020

Other product downloads available at fisherpaykel.com

- DWG
- DXF
- Planning Guide (English)

Where applicable:

All appliances use energy, and energy usage typically generates carbon emissions. **Fisher & Paykel Appliances' In-use Energy Carbon Emissions Estimate** indicates carbon emissions from a product's in-use energy. This is calculated either annually or per cycle, using the product's market-specific energy label energy consumption data multiplied by the carbon emissions factor for energy in your country or region.

Our In-use Energy Carbon Emissions Estimate is designed to assist customers in making informed purchasing decisions when comparing different Fisher & Paykel products. For example, a heat pump dryer typically has a lower In-use Energy Carbon Emissions Estimate than a vented dryer.

24/7

A PEACE OF MIND SALE
24 Hours 7 Days a Week Customer Support

T 08000886605 Wwww.fisherpaykel.com