21.6 cu ft Series 7 French Door Refrigerator Freezer, Precision Fit, Ice & Water

Series 7 | Contemporary

Stainless Steel | French hinge



This French Door Refrigerator Freezer pairs refined design with everyday flexibility. Precision Fit reduces visual gaps for closer alignment with cabinetry, while the external slimline water dispenser and automatic ice maker in the freezer deliver a steady supply of filtered chilled water and ice. It brings considered design, intelligent technology, and flexible food care together in one freestanding appliance.

- Precision Fit allows for reduced gaps around the refrigerator and closer alignment with cabinetry
- Chilled, filtered water through the door and automatic ice making in the freezer, with Ice Boost to increase production for busy times
- ActiveSmart™ and Humidity Control Bins help keep food fresher for longer
- Connect with Wi-Fi and the SmartHQ™ app to receive notifications and guides

DIMENSIONS

Height	70 1/2 "
Width	35 5/8 "
Depth	27 3/16 "

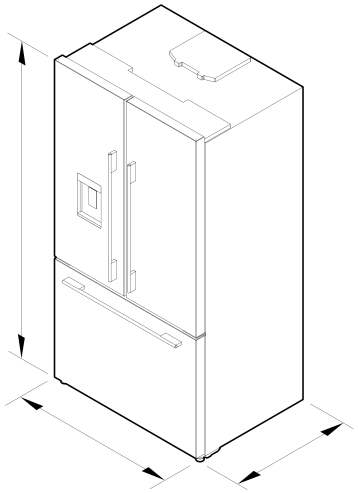

FEATURES & BENEFITS

A NEW STANDARD IN DESIGN FREEDOM

A well-composed kitchen is defined by clean lines and careful alignment. Our latest innovation in Freestanding Refrigeration, Precision Fit, reduces the visual gaps around the refrigerator to as small as 3/8", and enables a closer alignment with cabinetry while maintaining unrestricted door opening. Engineered for precise and lasting alignment, it delivers a new level of design freedom with all the benefits of freestanding refrigeration.

CONNECTED CARE FOR LASTING PERFORMANCE

Ongoing care is key to maintaining performance over time. With Wi-Fi and the SmartHQ™ app, you can access software updates and guides, monitor your water filter, and receive replacement reminders, with the option to subscribe for automatic filter delivery, with 10% off and free delivery on every order.

CHILLED WATER AND AUTOMATIC ICE

Enjoy filtered, chilled water on demand with the slimline external water dispenser. Inside the freezer, the automatic ice maker ensures a steady supply of ice into the dedicated storage bin, with Ice Boost to increase production by up to 30% - perfect for busy times.

EXTEND FRESHNESS WITH HUMIDITY CONTROL

Optimal humidity is fundamental to the preservation of fruits and vegetables. Our Humidity Control Bins with grooved lids are tested by our team of food scientists to maintain ideal humidity levels. Proven to store fruit and vegetables fresher for up to 6 times longer* than on the main shelf, preserving the flavour, nutrients and texture of your produce. *Based on internal testing, according to IEC 63169:2020/A1:2025

INTELLIGENT COOLING

Designed to learn the rhythm of your kitchen, ActiveSmart™ Foodcare continuously monitors door openings, temperature fluctuations and the surrounding climate — adjusting cooling and airflow to maintain the precise storage conditions, while optimising energy efficiency by cooling only when necessary.

GENEROUS CAPACITY, FLEXIBLE STORAGE

The right layout makes all the difference. An extra-large capacity with a 70:30 split of fresh to frozen storage gives more space to the fresh foods you reach for every day. Combined with full-width adjustable shelving and wide door openings, it offers flexible storage that adapts to your needs.

CONSIDERED DESIGN

Designed to make ingredients easier to access and organise, the freezer features a magnetic latch that brings the top drawer forward when the freezer door is opened, giving easier access to frequently used items. In the refrigerator compartment, full-extension runners improve visibility and help protect produce from damage during storage, while removable bins simplify cleaning and maintenance.

ENGINEERED FOR LIFE

Refrigerators need to endure years of daily use. Designed for reliable performance, our models are life-tested beyond standard safety requirements, with each door shelf impact-tested over 70,000 times to ensure lasting durability.

SPECIFICATIONS

Accessories (sold separately)

Water filter replacement	FPWF1

Capacity

Volume	21.6 cu ft
Volume freezer	6.6 cu ft
Volume refrigerator	15 cu ft

Connected Features

Alerts and notifications	•
Consumable subscription	•
Education and onboarding	•
Monitoring	•
Remote operation	•
Software updates	•

Consumption

Energy rating	Energy Star

Features

Adjustable door shelves	8
Adjustable glass cantilevered shelves	•
Cantilevered glass shelves	2
cantileveredGlassShelves	2
Door alarm	•
Fruit and vegetable bins	3
LED bin lighting	•
LED ceiling lighting	•
Precision fit	•
Smart appliance	•

Freezer Features

Automatic ice maker	•
Bottle chill	•
Door alarm	•
Freezer bins	3
Ice bin and scoop	•
Ice Boost	•
LED bin lighting	•
Max Cold	•

Installation Dimensions

Minimum inside width of cabinetry frame	36 3/7 "
Minimum internal depth of cabinetry	27 5/9 "
Minimum internal height of cabinetry	70 6/7 "

Performance

ActiveSmart™ Foodcare	•
Adaptive defrost	•
Frost free	•
Humidity control system	•
Inverter controlled compressor	•
Sabbath mode	•

Product dimensions

Depth	27 3/16 "
Height	70 1/2 "
Minimum air clearance each side	2/5 "
Minimum air clearance on top	2/5 "
Width	35 5/8 "

SKU	27079

The product dimensions and specifications in this page apply to the specific product and model. Under our policy of continuous improvement, these dimensions and specifications may change at any time. You should therefore check with Fisher & Paykel's Customer Care Centre to ensure this page correctly describes the model currently available. © Fisher & Paykel Appliances Ltd 2020

Other product downloads available at fisherpaykel.com

- DWG
- DXF
- Care & Maintenance (English)
- Care & Maintenance (Spanish)
- Care & Maintenance (French)
- First Use Guide (English)
- First Use Guide (Spanish)
- First Use Guide (Canadian French)
- Installation Considerations (English US)

- Installation Considerations (Spanish)
- Installation Considerations (Canadian French)
- Water Filter Replacement Instructions - Parts 847200 and 847201 (English)
- Installation Guide (English)
- Water Filter Replacement Instructions - Parts 847200 and 847201 (French)
- Installation Guide (Canadian French)
- Installation Guide (Spanish)
- Planning Guide (English)
- Plannin Guide (Spanish)
- Planning Guide (French)
- Revit
- Rhino
- Safety & Warnings (English)
- Safety & Warnings (Spanish)
- Safety & Warnings (Canadian French)
- SkecthUp

Where applicable:

All appliances use energy, and energy usage typically generates carbon emissions. **Fisher & Paykel Appliances' In-use Energy Carbon Emissions Estimate** indicates carbon emissions from a product's in-use energy. This is calculated either annually or per cycle, using the product's market-specific energy label energy consumption data multiplied by the carbon emissions factor for energy in your country or region.

Our In-use Energy Carbon Emissions Estimate is designed to assist customers in making informed purchasing decisions when comparing different Fisher & Paykel products. For example, a heat pump dryer typically has a lower In-use Energy Carbon Emissions Estimate than a vented dryer.



A PEACE OF MIND SALE
24 Hours 7 Days a Week Customer Support

T 1.888.936.7872 Wwww.fisherpaykel.com