569L Series 7 French Door Refrigerator Freezer

Series 7 | Contemporary

Stainless Steel | French hinge



Our largest capacity French Door model has intuitive, flexible storage space, with a stylish stainless steel finish.

- ActiveSmart™ technology helps keep food fresher for longer by constantly maintaining the ideal temperature.
- Spacious bottom freezer with full extension drawer gives easy access to frozen goods.

DIMENSIONS

Height	1790 mm
Width	900 mm
Depth	695 mm

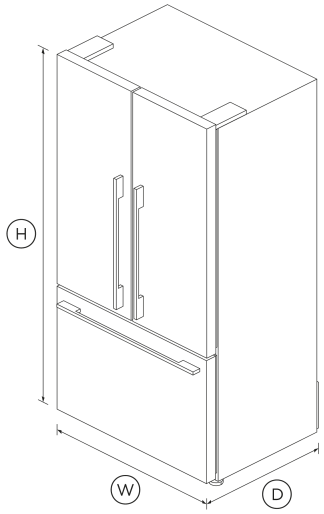

FEATURES & BENEFITS

ACTIVESMART™ FOODCARE

ActiveSmart™ Foodcare learns how you live. It's the technology that understands how you use your fridge and adjusts the temperature, airflow and humidity inside to help keep food fresher for longer.

Humidity Control

Your fruit and veges need different environments. The humidity control slides in each storage bin create a microclimate that helps keep food fresher for longer.

Easy Cleaning

Spill-safe secure glass shelves easily capture any drips or leaks and prevent them from falling on items below.

Clever Energy

Your fridge adapts to daily use by cooling and defrosting only when needed. This means your fridge uses the energy it needs without compromising on food care.

SIMPLE STORAGE

This fridge is designed to make it simple for you to store, access and remove food. Storage bins give you full access inside when they're pulled open and can be easily removed to clean. Our flexible shelving also gives you more storage options.

SPECIFICATIONS

Capacity

Total gross capacity	614 L
Volume	569 L
Volume freezer	152 L
Volume refrigerator	417 L

Consumption

Energy rating	3.5 star
Energy usage	433kWh/year (IEC 62552- 2015), 448kWh/year (AS/NZS 4474.2:2009)
In-use energy carbon emissions estimate	41.1kgCO2e/year (IEC 62552- 2015), 42.6kgCO2e/year (AS/NZS 4474.2:2009)

Features

Adjustable glass shelves	2
Adjustable half width door shelves	4
Covered door shelves	2
Deli storage bins	2
Door alarm	•
Front levelling feet	•

Fruit and vegetable bins	2
Full extension runners	•
Full width door shelves	2
LED lighting	•
Rear rollers	•
Single bottle holders	4
Smart appliance	•
SmartTouch control panel	•

Freezer Features

Bottle chill	•
Fast freeze	•
Freezer bins	3
Ice trays	1

Performance

ActiveSmart™ Foodcare	•
Adaptive defrost	•
Frost free	•
Frost free freezer	•
Humidity control system	•
Inverter controlled compressor	•
R600a refrigerant	•
Sabbath mode	•

Power requirements

Rated current	10 A
Supply frequency	50 Hz
Supply voltage	220 - 240 V

Product dimensions

Depth	695 mm
Depth (including handles)	735 mm
Height	1790 mm
Height to top of cabinet	1790 mm
Minimum air clearance - each side	20 mm
Minimum air clearance - on top	50 mm
Width	900 mm

SKU 26504

The product dimensions and specifications in this page apply to the specific product and model. Under our policy of continuous improvement, these dimensions and specifications may change at any time. You should therefore check with Fisher & Paykel's Customer Care Centre to ensure this page correctly describes the model currently available. © Fisher & Paykel Appliances Ltd 2020

Other product downloads available at fisherpaykel.com

- Energy Label
- Installation Guide (English)
- User Guide (English)
- Installation & User Guide (English)

Where applicable:

All appliances use energy, and energy usage typically generates carbon emissions. **Fisher & Paykel Appliances' In-use Energy Carbon Emissions Estimate** indicates carbon emissions from a product's in-use energy. This is calculated either annually or per cycle, using the product's market-specific energy label energy consumption data multiplied by the carbon emissions factor for energy in your country or region.

Our In-use Energy Carbon Emissions Estimate is designed to assist customers in making informed purchasing decisions when comparing different Fisher & Paykel products. For example, a heat pump dryer typically has a lower In-use Energy Carbon Emissions Estimate than a vented dryer.

24/7

A PEACE OF MIND SALE
24 Hours 7 Days a Week Customer Support
T 0800 372 273 Wwww.fisherpaykel.com