569L Series 7 French Door Refrigerator Freezer, Ice & Water

Series 7 | Contemporary

Black Stainless Steel | French hinge



Our largest capacity French Door model has intuitive, flexible storage space, with a sleek black stainless steel finish.

- ActiveSmart™ technology helps keep food fresher for longer by constantly maintaining the ideal temperature.
- Spacious bottom freezer with full extension drawer gives easy access to frozen goods.
- Door water dispenser and internal ice maker

DIMENSIONS

Height	1790 mm
Width	900 mm
Depth	695 mm

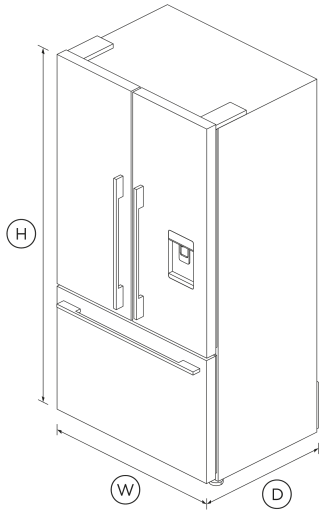

FEATURES & BENEFITS

ActiveSmart™ Foodcare

ActiveSmart™ Foodcare learns how you live. It's the technology that understands how you use your refrigerator and adjusts the temperature, airflow and humidity inside to help keep food fresher for longer.

Clever Energy

Your refrigerator adapts to daily use by cooling and defrosting only when needed. This means it uses the energy it needs without compromising on food care.

Easy To Clean

No more dirty marks with our EZKleen feature for stainless steel fridges. Anti-fingerprint coating means you simply wipe clean any finger marks. Spill-safe secure glass shelves easily capture any drips or leaks.

Humidity Control

Your fruit and veges need different environments. The humidity control slides in each storage bin create a microclimate that helps keep food fresher for longer.

Design quality

Our refrigerators are designed and built using the best quality materials. We use real stainless steel, and solid glass for the interior shelving.

Ice maker

Fresh ice is always available for you in a dedicated freezer bin. Simply turn it off to free up freezer space or, during busy times, boost ice production by up to 30%.

Simple storage

This refrigerator is designed to make it simple for you to store, access and remove food. Storage bins give you full access inside when they're pulled open and can be easily removed to clean. Our flexible shelving also gives you more storage options.

SPECIFICATIONS

Accessories (sold separately)

Water filter replacement	847200 - FWC3

Capacity

Total gross capacity	614 L
Volume	569 L
Volume freezer	152 L
Volume refrigerator	417 L

Consumption

Energy rating	3.5 star
Energy usage	433kWh/year (IEC 62552- 2015), 453kWh/year (AS/NZS 4474.2:2009)
In-use energy carbon emissions estimate	41.1kgCO2e/year (IEC 62552- 2015), 43.0kgCO2e/year (AS/NZS 4474.2:2009)

Features

Adjustable door shelves	6
Adjustable glass shelves	2
Cantilevered shelves	2
Covered door shelves	2
Door alarm	•
Fruit and vegetable bins	2
LED lighting	•
Smart appliance	•
SmartTouch control panel	•
Stackable bottle holders	4
Ultra slim water dispenser	•

Freezer Features

Automatic ice maker	•
Bottle chill	•
Door alarm	•
Fast freeze	•
Ice bin and scoop	•
Ice Boost	•
Large plastic bins	•
LED Lighting	•
Small plastic bins	•

Performance

ActiveSmart™ Foodcare	•
Adaptive defrost	•
Frost free freezer	•
Humidity control system	•
Inverter controlled compressor	•
R600a refrigerant	•
Sabbath mode	•

Power requirements

Rated current	10 A
Supply frequency	50 Hz
Supply voltage	230 V

Product dimensions

Depth	695 mm
Depth (including handles)	730 mm
Height	1790 mm
Height to top of cabinet	1790 mm
Minimum air clearance - each side	20 mm
Minimum air clearance - on top	50 mm
Width	900 mm

SKU	26494

The product dimensions and specifications in this page apply to the specific product and model. Under our policy of continuous improvement, these dimensions and specifications may change at any time. You should therefore check with Fisher & Paykel's Customer Care Centre to ensure this page correctly describes the model currently available. © Fisher & Paykel Appliances Ltd 2020

Other product downloads available at fisherpaykel.com

- DXF
- Archicad
- Data Sheet (English)
- DWG
- Energy Label
- Water Filter Replacement Instructions - Parts 862285 and 862288 (English)
- Installation Guide (English)
- Revit
- Rhino
- SketchUp

Where applicable:

All appliances use energy, and energy usage typically generates carbon emissions. **Fisher & Paykel Appliances' In-use Energy Carbon Emissions Estimate** indicates carbon emissions from a product's in-use energy. This is calculated either annually or per cycle, using the product's market-specific energy label energy consumption data multiplied by the carbon emissions factor for energy in your country or region.

Our In-use Energy Carbon Emissions Estimate is designed to assist customers in making informed purchasing decisions when comparing different Fisher & Paykel products. For example, a heat pump dryer typically has a lower In-use Energy Carbon Emissions Estimate than a vented dryer.

24/7

A PEACE OF MIND SALE
24 Hours 7 Days a Week Customer Support
T 0800 372 273 Wwww.fisherpaykel.com