8kg Series 5 Heat Pump Dryer

Series 5 | Heat Pump

White



Better energy efficiency and fabric care with heat pump condensing technology, which dries your clothes at a lower temperature.

- 13 dry cycles including Freshen, Delicate, Bulky and Easy Iron for comprehensive fabric care
- Dry a couple of items fast with the convenient Quick 30 cycle
- 7 Star Energy Rating
- No need for external venting, allowing your dryer to be placed anywhere in your home

DIMENSIONS

Height	850 mm
Width	600 mm
Depth	650 mm

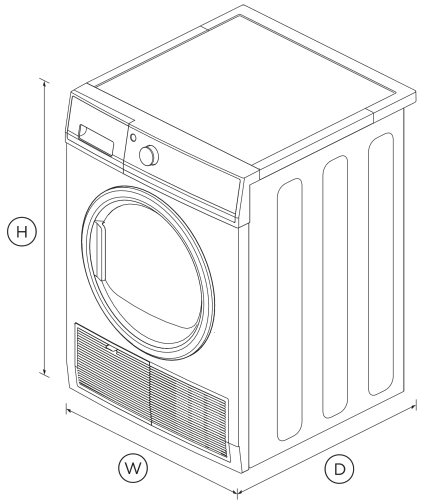

FEATURES & BENEFITS

Cares For Clothes

13 drying cycles including Freshen, Delicate, Bulky and Easy Iron for every type of garment. Select the cycle that best suits your load to confidently dry your clothes.

Quick Drying

When time is short, you can select the Quick 30 cycle to dry clothes in 30 mins while maintaining care of fabric. Perfect for light items like work shirts or school uniforms.

Heat Pump Technology

Heat pump technology dries at lower temperatures for gentle fabric care and because moisture is condensed, no venting is required. This is an ideal dryer for laundries where venting is difficult, as it can be placed almost anywhere in the home.

Avoid Over-Drying With Auto-Sensing

Auto-sensing prevents over-drying by sensing moisture levels inside the drum and shutting off automatically. This helps clothes last longer and reduces energy consumption.

Too Precious To Tumble?

The drying rack is designed for items that can't be tumble dried. It fits easily into the dryer and delivers the perfect result for those precious delicates, shoes and toys.

Drum Light

A handy interior light turns on when you open the dryer door providing improved visibility inside the drum.

SPECIFICATIONS

Capacity

Total capacity	8 kg

Consumption

Energy rating	7 star
Energy usage	155kWh/year
In-use energy carbon emissions estimate	90.8kgCO2e/year

Dry Cycles

Bulky	•
Cottons	•
Delicate	•
Easy Iron	•
Everyday	•
Heavy	•
Number of cycles	13
Quick 30	•
Rack dry	•
Sheets	•

Time dry	•
Towels	•
Wool	•

Features

Clean condenser filter reminder	•
Clean door lint filter reminder	•
Drum light	•
Drying rack	•
Easy access lint filter	•
Easy clean condenser filter	•
End of cycle signal	•
Keylock	•
No external venting	•
Progress indicator	•
SmartTouch™ control dial	•
Stainless steel drum	•
Time to go	•
Wrinkle free option	•

Performance

Auto sensing	•
Dryness settings	5
Heat pump technology	•
Reverse tumbling	Semi reverse tumbling
Temperature settings	4
Time dry	10 mins - 150 mins

Product dimensions

Depth	650 mm
Height	850 mm
Width	600 mm

SKU 93281

The product dimensions and specifications in this page apply to the specific product and model. Under our policy of continuous improvement, these dimensions and specifications may change at any time. You should therefore check with Fisher & Paykel's Customer Care Centre to ensure this page correctly describes the model currently available. © Fisher & Paykel Appliances Ltd 2020

Other product downloads available at fisherpaykel.com

- Energy Label
- Installation Guide (English)
- Performance Guide (English)
- User Guide (English)

Where applicable:

All appliances use energy, and energy usage typically generates carbon emissions. **Fisher & Paykel Appliances' In-use Energy Carbon Emissions Estimate** indicates carbon emissions from a product's in-use energy. This is calculated either annually or per cycle, using the product's market-specific energy label energy consumption data multiplied by the carbon emissions factor for energy in your country or region.

Our In-use Energy Carbon Emissions Estimate is designed to assist customers in making informed purchasing decisions when comparing different Fisher & Paykel products. For example, a heat pump dryer typically has a lower In-use Energy Carbon Emissions Estimate than a vented dryer.

24/7

A PEACE OF MIND SALE
24 Hours 7 Days a Week Customer Support
T 1300 650 590 Wwww.fisherpaykel.com