90cm Series 9 5 Zone Induction Cooktop, 2 SmartZones

Series 9 | Minimal

Black

Create the ultimate culinary solution. Designed to seamlessly integrate with the auxiliary cooktop and teppan modules, or be installed standalone, this primary cooktop features an intuitive 6" touchscreen and precision induction technology, for effortless control and perfect results.

- Select and distribute modular cooktops according to your patterns of use
- Choose from a grey or black glass finish to suit your kitchen design
- Effortlessly control all cooktops via the 6" touchscreen, for a unified cooking experience
- Includes our Wireless Temperature Sensor for precisely monitoring your food in real time

DIMENSIONS

Height	62 mm
Width	900 mm
Depth	530 mm

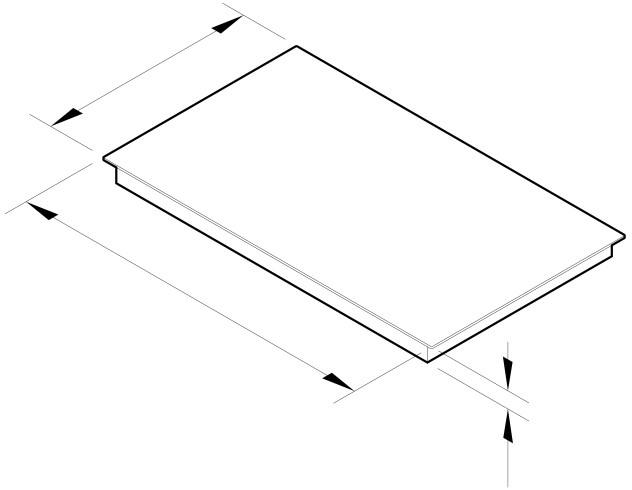

FEATURES & BENEFITS

Modular Design Freedom

Achieve complete design freedom with our range of modular cooktops. Seamlessly integrate cooktops of various sizes into your cooking space, or install standalone, tailoring the setup to suit your patterns of use. This design flexibility allows you to optimise space and flow, creating a kitchen that perfectly aligns with the way you live, cook and entertain.

Complementary Design

Available in both grey and black finishes, our Minimal style modular cooktops effortlessly complement your kitchen's aesthetics. Designed to match our touchscreen ovens in both style and functionality, they offer a unified cooking experience. The flush installation ensures seamless integration into modern kitchen spaces.

Centralised Touchscreen Control

The 6" touchscreen interface is your centralised hub for all modular cooktops. Effortlessly manage auxiliary cooktops, downdraft and teppan modules, providing a streamlined cooking experience. This single screen allows you to control all cook zones and connected ventilation, ensuring a clean and sleek kitchen aesthetic. Refined on-glass graphics and the absence of physical dials further elevate our Minimal style aesthetic.

Mastery Of Temperature

Fisher & Paykel induction cooktops are designed for precision, delivering mastery of temperature. Whether you're grilling steaks, simmering sauces, or crafting delicate stir-fries, you can seamlessly transition from high heat to a gentle simmer for perfect results every time.

Superior Efficiency

Less heat is wasted during induction cooking because only the cookware is heated, not the cooktop surface. This makes induction cooking more energy-efficient than electric or gas cooktops.

Flexible Cooking Area

SmartZone links two cooking zones and controls them as one, giving you the flexibility to use large pans and griddles and easily handle bigger food items, such as a whole fish. SmartZone streamlines the cooking process and allows you to explore different culinary techniques with ease.

SPECIFICATIONS

Cleaning

Flat easy clean glass surface	•

Consumption

In-use energy carbon emissions estimate	0.0kgCO2e/year

Controls

Intuitive touchscreen display	•

Minute timer	•
Modular compatibility	Primary/ Standalone
Multi-language display	•

Features

Modular design	•

Performance

Induction cooking technology	•
PowerBoost	•
SmartZone	•

Power requirements

Connection	Terminal block, 1 N or 3 N
Service	48 A
Supply	220-240 V, 50 Hz / 60 Hz

Product dimensions

Depth	530 mm
Height	62 mm
Width	900 mm

Safety

Keylock	•
Pan detection system	•
Safety time out	•
Surface hot indicators	•

Zone ratings

Centre zone (PowerBoost set)	1850/2600 (3000/5500)
Left front zone (PowerBoost set)	2100 (3700)
Left rear zone (PowerBoost set)	2100 (3700)
Right front zone (PowerBoost set)	2100 (3700)
Right rear zone (PowerBoost set)	2100 (3700)

Zones

Number of zones	5

SKU	82812

The product dimensions and specifications in this page apply to the specific product and model. Under our policy of continuous improvement, these dimensions and specifications may change at any time. You should therefore check with Fisher & Paykel's Customer Care Centre to ensure this page correctly describes the model currently available. © Fisher & Paykel Appliances Ltd 2020

Other product downloads available at fisherpaykel.com

- DXF
- DWG
- Energy Label (Chinese)
- Installation Guide (English)
- Installation Guide (Chinese)
- Planning Guide (English)
- Planning Guide (Chinese)
- Rhino
- Restriction of the Use of Hazardous Substances (Chinese)
- Safety & Warnings (Chinese)
- Safety & Warnings (English)
- SketchUp
- User Guide - Multiple Product Setup (English)
- User Guide - Primary Induction Modular Cooktop (English)
- User Guide - Multiple Product Setup (Chinese)
- User Guide - Primary Induction Modular Cooktop (Chinese)

Where applicable:

All appliances use energy, and energy usage typically generates carbon emissions. **Fisher & Paykel Appliances' In-use Energy Carbon Emissions Estimate** indicates carbon emissions from a product's in-use energy. This is calculated either annually or per cycle, using the product's market-specific energy label energy consumption data multiplied by the carbon emissions factor for energy in your country or region.

Our In-use Energy Carbon Emissions Estimate is designed to assist customers in making informed purchasing decisions when comparing different Fisher & Paykel products. For example, a heat pump dryer typically has a lower In-use Energy Carbon Emissions Estimate than a vented dryer.