15" Series 9 1 Burner Gas Cooktop, Natural Gas

Series 9 | Minimal

Black Glass | Natural gas

Compatible with our series of modular cooktops, it allows for customizable configurations to suit any kitchen design.

- Perfect for a compact cooking area with one dual flame wok burner
- Mix and match with our modular induction cooktops for a custom kitchen setup
- Independently controlled via a manual dial for flexible cooking options
- Flexible installation with options for both flush and raised to complement your countertop design

DIMENSIONS

Height	4 7/8 "
Width	15 5/32 "
Depth	20 7/8 "

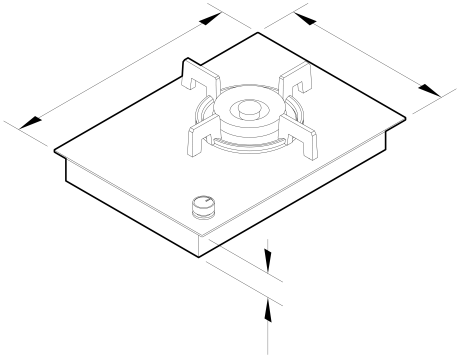

FEATURES & BENEFITS

Modular Design Freedom

Achieve complete design freedom with our range of modular cooktops. Seamlessly integrate cooktops of various sizes into your cooking space, tailoring the setup to suit your patterns of use. This design flexibility allows you to optimize space and flow, creating a kitchen that perfectly aligns with the way you live, cook, and entertain.

Precise Control

The consistent flame and heat distribution of the dual flame wok burner combined with the highly responsive dials offer precise heat adjustment that can perfect a slow simmer for sauces or an intense heat for searing steaks.

Easy Cleaning

Cleaning and care of these cooktops are easy with sealed burners and a single sheet cooking surface. After each use, simply remove the trivets and wipe down the glass.

Quality Materials

Featuring cast iron trivets, anodized metal dials, and high-temperature resistant ceramic glass, our cooktops are built with the finest materials for optimal performance.

Safe & Sound

The flame failure safety device automatically turns off the gas if the flame is extinguished.

Crafted for Durability

Our cooktops are built with glass edges that are chip-tested to resist damage from pots and pans, ensuring lasting quality.

SPECIFICATIONS

Accessories (included)

High power wok cooking	•
Small pan support	•
Wok stand	1

Burner ratings

Wok burner (natural gas)	17361 BTU

Burners

Number of burners	1
Wok burner	1

Cleaning

Easy clean cooktop design	•

Quick component removal	•

Consumption

In-use energy carbon emissions estimate	0.0kgCO2e/year

Controls

Dual wok control	•
Dual wok feature for simmering	•
Ergonomic control dials	•
Modular compatibility	Standalone
Toughened fused glass graphics	•

Features

Modular design	•

Performance

Auto re-ignition system	•
Blue flame burner	•
Both LPG & NG models available	•
Cast iron grates	•
Dishwasher proof grates	•
Electronic ignition	•
Quick connect gas valves	•

Power requirements

Amperage	15 A
Electrical connection	Power cable
Supply frequency	60 Hz
Supply voltage	120 V

Product dimensions

Depth	20 7/8 "
Height	4 7/8 "
Width	15 5/32 "

SKU	84865

The product dimensions and specifications in this page apply to the specific product and model. Under our policy of continuous improvement, these dimensions and specifications may change at any time. You should therefore check with Fisher & Paykel's Customer Care Centre to ensure this page correctly describes the model currently available. © Fisher & Paykel Appliances Ltd 2020

Other product downloads available at fisherpaykel.com

- DWG
- DWG
- Installation Guide (English)
- Installation Guide (English)
- Installation Guide - Primary Modular Cooktop (Canadian French)
- Installation Guide - Multiple Product Setup with Overhead Ventilation (Canadian French)
- Installation Guide - Primary Modular Cooktop (Spanish)
- Installation Guide - Multiple Product Setup with Overhead Ventilation (Spanish)
- Planning Guide (English)
- California Warning Proposition 65 (English, Spanish, Canadian French, Chinese)
- Revit
- Rhino
- Right To Repair Declaration (English, Canadian French)
- SketchUp
- User Guide (English)
- User Guide (Canadian French)
- User Guide (Spanish)

Where applicable:

All appliances use energy, and energy usage typically generates carbon emissions. **Fisher & Paykel Appliances' In-use Energy Carbon Emissions Estimate** indicates carbon emissions from a product's in-use energy. This is calculated either annually or per cycle, using the product's market-specific energy label energy consumption data multiplied by the carbon emissions factor for energy in your country or region.

Our In-use Energy Carbon Emissions Estimate is designed to assist customers in making informed purchasing decisions when comparing different Fisher & Paykel products. For example, a heat pump dryer typically has a lower In-use Energy Carbon Emissions Estimate than a vented dryer.

24/7

A PEACE OF MIND SALE
24 Hours 7 Days a Week Customer Support

T 1.888.936.7872 Wwww.fisherpaykel.com