Freestanding Cooker, Dual Fuel, 90cm, 5 Burners

Series 7 | Classic

White

Get the best of both worlds with dual fuel. A gas cooktop with wok burner is paired with a nine-function convection oven.

- Five burner gas cooktop, with precise heat control
- Convection oven with 140L total capacity and nine oven functions including Pastry Bake with pizza mode and rapid proof for making bread
- Non-tip full-extension shelves for safe removal of hot dishes

DIMENSIONS

Height	**898 - 946mm**
Width	**897mm**
Depth	**600mm**

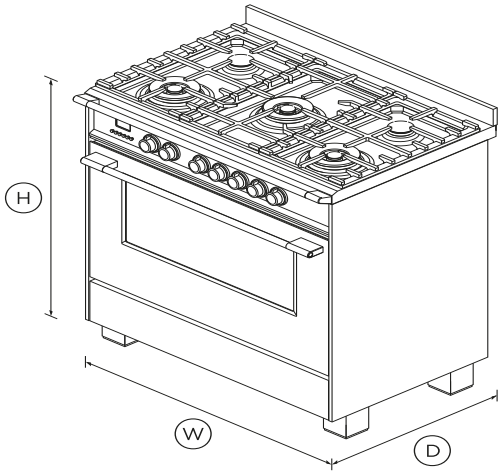

FEATURES & BENEFITS

Multi-shelf cooking
Our AeroTech™ system circulates air evenly throughout the entire oven so dishes on the top shelf turn out just as perfectly as food cooking on the bottom shelf.

Quality and durability
Every detail has been carefully crafted. The solid, perfectly balanced soft-close door, durable cooktop trivets and glowing halo dials all add up to an exceptional, premium range.

Burner power & control
Instant and immediate control from the highest to the gentlest heat. The finely tuned cooktop controls let you sear, stir fry or simmer a delicate sauce to perfection.

Large capacity oven
The generous 140L total capacity oven gives you plenty of space to cook multiple dishes at once.

Easy to clean
Your cooktop simply needs a quick wipe to keep it looking good as new for years to come, as the gas cooktop is made from a single piece of stainless steel that contains spills. The oven door, its inner pane of glass and runners can also be removed for easy cleaning.

Even heat
Accurate, electronically-controlled oven heat ensures a great result every time.

SPECIFICATIONS

Accessories

Chromed shelf runners	**1 set**
Flat wire shelf	**1**
Full extension sliding shelves	**1 set (part 578744)**
Full extension telescopic	**1 set (part 578744)**
Grill rack	•
Roasting dish	**1**
Small pot support	**1 (part 533981 cast)**
Step down wire shelf	•

Accessories (sold separately)

Kick strip, black (optional)	**KICKOR90B1**
Kick strip, stainless steel	**KICKOR90X1**
Kick strip, white (optional)	**KICKOR90W1**

Burner ratings

Dual wok burner inner/outer	**1.1 - 14.9MJ/h**
Dual wok burner inner/outer	**1.1 - 16.2MJ/h**
Maximum burner power	**16.2MJ/h**
Semi-rapid burner (LPG)	**5.8MJ/h**
Semi-rapid burner (natural	**6.5MJ/h**
Total cooktop power	**58.0MJ/h**
Triple ring wok burner (LPG)	**6.5 - 14.4MJ/h**
Triple ring wok burner (natural	**6.5 - 14.4MJ/h**

Capacity

Shelf positions	**6**
Shelf positions (main oven)	**6**
Total capacity	**140L**
Usable capacity	**120L**
Usable capacity (main oven)	**120L**

Cleaning

Acid resistant graphite enamel	•
Drop down grill element	•
Removable oven door	•
Removable oven door inner	•
Removable shelf runners	•

Controls

Audio feedback	•
Automatic cooking/minute	•
Automatic pre-set	•
Celsius/Fahrenheit	•
Electronic clock	•
Laser etched graphics	•
Precise electronic temperature	•
Sabbath mode	•
Turned stainless steel clock	•

Oven features

AeroTech™ technology	•
Automatic rapid pre-heat	•
Bright chromed, cast zinc dials	•
Electronic oven control	•
Full extension telescopic	•
Internal light	**4 x 25W halogen (2 side & 2**
Soft open/close door	•
Storage drawer	•
True convection	•
Twin cavity fans	•

Oven functions

Bake	•
Classic bake	•
Fan bake	•
Fan forced	•
Fan grill	•
Grill	•
Number of functions	**9**
Pastry Bake with Pizza mode	•
Rapid proof	•
Roast	•
True convection	•

Oven performance

CoolTouch door	**Triple glazed**

Power requirements

Amperage	**22A**
Supply frequency	**50Hz**
Supply voltage	**220 - 240V**

Product dimensions

Depth	**600mm**
Height	**898 - 946mm**
Width	**897mm**

Cooktop Features

Hob rail	•
LPG/Natural gas compatible	•
Sealed range top	•

Cooktop Performance

Number of burners	**5**

Safety

Advanced cooling system	•
Anti-tilt bracket	•
Balanced oven door	•
CoolTouch door	•
Flame failure system	•
Full extension telescopic	**1 set (part 578744)**

Full extension telescopic	•
Non-tip shelves	•

Warranty

Parts and labour	**2 years**

SKU	81683

The product dimensions and specifications in this page apply to the specific product and model. Under our policy of continuous improvement, these dimensions and specifications may change at any time. You should therefore check with Fisher & Paykel's Customer Care Centre to ensure this page correctly describes the model currently available. ? Fisher & Paykel Appliances Ltd 2020

Other product downloads available at fisherpaykel.com

- Service & Warranty
- User Guide
- Installation Guide - Kick Strip
- Installation Guide

24/7

A PEACE OF MIND SALE

24 Hours 7 Days a Week Customer Support

T 1300 650 590 **W**www.fisherpaykel.com