Series 9 Integrated Tall Single DishDrawer Dishwasher

Integrated

Introducing the next evolution of DishDrawer™ Dishwasher design. The Integrated Single Tall DishDrawer™ Dishwasher delivers advanced performance and quiet efficiency, with extra height to fit larger plates and cookware. Designed to integrate seamlessly within your kitchen cabinetry, it combines intuitive touch controls with a step up in energy and water efficiency for everyday living.

- Panel-ready design allows seamless integration with your kitchen cabinetry, or pair with a stainless steel door panel
- Capacitive touch controls, refined styling and SmartHQ™ connectivity bring intuitive convenience to everyday dish care
- Designed for true half-load washing, with flexible racking that fits larger plates up to 310mm in diameter
- Versatile wash cycles and modifiers ensure clean results, while fan-assisted drying helps leave dishes ready to use

DIMENSIONS

Height	454 mm
Width	599 mm
Depth	573 mm

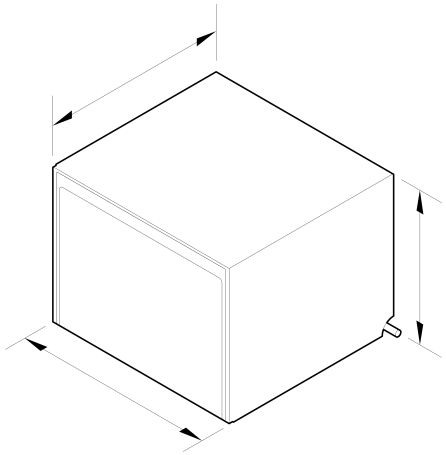

SPECIFICATIONS

Accessories (included)

Cutlery basket	•

Accessories (sold separately)

Door panel black stainless steel	ADDD60STPB
Door panel recessed handle black stainless steel	ADDD60STNB
Door panel recessed handle matte black glass	ADDD60STZB
Door panel recessed handle stainless steel	ADDD60STNX
Door panel stainless steel	ADDD60STPX
Handle kit Contemporary brushed black	AHD7DDDW60B
Handle kit Contemporary brushed silver	AHD7DDDW60S
Handle kit Contemporary square, black	AHD3-OBDD-60B
Handle kit Minimal black	AHM1DDDW60B
Handle kit Minimal grey	AHM1DDDW60G

Capacity and loading

Accommodates round plates up to	280mm
Adjustable height, foldable cupracks	•
Fold down tines	•
Pitch adjustable tines	•
Place settings	6
Wine glass supports	•

Connected Features

Alerts and notifications	•
Consumable subscription	•
Education and onboarding	•
Energy consumption monitoring	•
Monitoring	•
Remote operation	•
Software updates	•

Consumption

Energy rating	C

Controls

Black touch concealed interface	•
Electronic fault/Diagnostic indicator	•
End of cycle beeps	•
Energy saving delay start option of up to 12 hours	•
Keylock	•
Knock to pause	•
Rinse aid indicator light	•
Smart appliance	•

Features

Advanced filtration	•
Built-in water softener	•
Fan assisted drying	•
Flood protection	•
Flow through detergent dispenser	•
Motor type	BLDC
Quiet operation	•
SmartDrive™ technology	•
Soft close drawer	•
Three-stage filtration system	•
Variable wash pressure technology	•

Performance

Noise emissions	43 dBA

Power requirements

Dedicated Circuit (A)	10A
Supply frequency	50 Hz
Voltage	220 - 240V

Product dimensions

Depth	573 mm
Height	454 mm
Width	599 mm

Wash Program Modifiers

Dry +	•
Gentle	•
Intensive	•
Wash modifiers	3

Wash Programs

60 min	•
Eco	•
Heavy	•
Hygiene	•
Light	•
Medium	•
Wash programs	6

Water connection

Water pressure	30kPa - 1000 kPa
Water supply	3/4" BSP (20mm) Connector Water Inlet Hose

SKU	85775

The product dimensions and specifications in this page apply to the specific product and model. Under our policy of continuous improvement, these dimensions and specifications may change at any time. You should therefore check with Fisher & Paykel's Customer Care Centre to ensure this page correctly describes the model currently available. © Fisher & Paykel Appliances Ltd 2020

Other product downloads available at fisherpaykel.com

- DWG
- DXF
- Planning Guide (English)

Where applicable:

All appliances use energy, and energy usage typically generates carbon emissions. **Fisher & Paykel Appliances' In-use Energy Carbon Emissions Estimate** indicates carbon emissions from a product's in-use energy. This is calculated either annually or per cycle, using the product's market-specific energy label energy consumption data multiplied by the carbon emissions factor for energy in your country or region.

Our In-use Energy Carbon Emissions Estimate is designed to assist customers in making informed purchasing decisions when comparing different Fisher & Paykel products. For example, a heat pump dryer typically has a lower In-use Energy Carbon Emissions Estimate than a vented dryer.

24/7

A PEACE OF MIND SALE
24 Hours 7 Days a Week Customer Support

T 08000886605 Wwww.fisherpaykel.com