Gas Range, 36", 6 Burners, LPG

Series 7 | Professional

Make a statement with this Professionally-styled dual fuel range: powerful gas burners paired with a large capacity gas oven.

- Top burner heat of 19,000 BTU, for seriously fast boiling
- Convection oven with 5.3 cu ft total capacity
- Non-tip full-extension shelves for safe removal of hot dishes

DIMENSIONS

Width	**35 7/8"**
Depth	**29 1/8"**

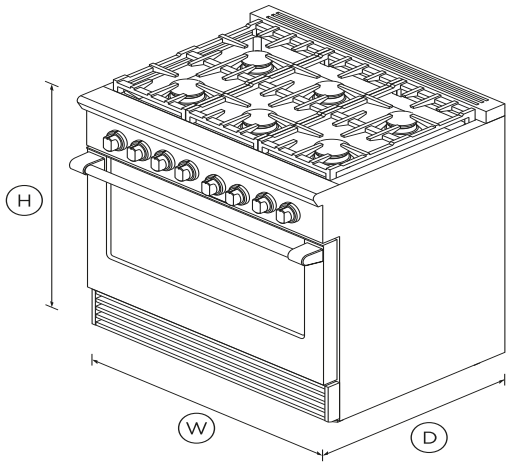

FEATURES & BENEFITS

Cooktop power
Sealed Dual Flow Burners™ deliver cooktop power up to 23,500 BTU (NG models) for seriously fast boiling right down to a precise 140°F full surface simmer with the gentlest of flames.

Total control
Precise control across high and low settings is delivered through the halo-illuminated cooktop dials. The ovens have true convection and electronic oven control for precise and consistent temperatures.

Easy to clean
A sealed cooktop surface coupled with a commercial-style stainless steel finish means your cooktop simply needs a quick wipe to keep it looking good as new.

Instant visibility
Control dials have halo-illumination glowing white – heating up; orange – temperature reached; red – self-cleaning mode. The oven is illuminated by two powerful incandescent lights.

Cooking flexibility
The cooktop is designed for easy access to any burner with grates you can smoothly slide pots across. The oven is large enough to hold full size baking sheets.

<<Missing Feature Title>>
This range has been carefully crafted in every detail from performance to durability using quality materials.

SPECIFICATIONS

Accessories

Square handle option	**AH-R36**

Capacity

Capacity total (AHAM)	**5.3cu ft**
Capacity usable (AHAM)	**4cu ft**
Shelf positions	**5**
Total capacity	**5.3cu ft**
Usable capacity	**4cu ft**

Cleaning

Dishwasher proof trivets	•

Controls

Electric circuit	**3 wire**

Metal illuminated dials	•

Gas Requirements

Fitting and pipe	**½ NPT, min. ⅝″ ⍰ flex line**
Supply Pressure (LPG)	**11″ to 14″ W.C**
Supply Pressure (natural gas)	**6″ to 9″ W.C**

Installation Dimensions

Height (excluding vent trim)	**35 ¾ - 36 ¾″**

Oven features

Broil pan	•
Electronic oven control	•
Full extension telescopic	•
Infrared Broiler	•
Internal light	•

Oven functions

Bake	•
Broil	•
Convection bake	•
Number of functions	**3**

Oven performance

Bake	**28000 BTU**
Bake power	**22,000 BTU**
Broil	**19000 BTU**

Power requirements

Amperage	**15A**
Rated current	**15A**
Supply frequency	**60Hz**

Product dimensions

Depth	**29 ⅛″**
Width	**35 ⅞″**

Rangetop features

Sealed Dual Flow Burners™	**6**
Sealed range top	•
Vent trim included	•

Rangetop Performance

Max burner power	**19,000 BTU**
Power back centre	**13,000 BTU**
Power back left	**13,000 BTU**
Power back right	**13,000 BTU**
Power front centre	**15,000 BTU**
Power front left	**19,000 BTU**
Power front right	**19,000 BTU**
Total cooktop power	**92,000 BTU**

Recommended Back Guards Ventilation

Combustible situation	**BGRV2-3036H**
Minimum CFM	**600-1200**
Non combustible situation	**BGRV2-3036 / BGRV2-1236**
Recommended hood	**HCB36-6_N (36"" Professional**

Safety

Full extension telescopic	•

SKU	71355

TEST The product dimensions and specifications in this page apply to the specific product and model. Under our policy of continuous improvement, these dimensions and specifications may change at any time. You should therefore check with Fisher & Paykel's Customer Care Centre to ensure this page correctly describes the model currently available. ? Fisher & Paykel Appliances Ltd 2020

A PEACE OF MIND SALE

24 Hours 7 Days a Week Customer Support

T 1.888.936.7872 **W**www.fisherpaykel.com