24" Series 11 Minimal Handleless Compact Combi-Steam Oven

Series 11 | Minimal

Black Glass



With its elegant handleless design, this compact Combi-Steam oven offers steam cooking, convection cooking, or a combination of both - with method-led cooking.

- Create perfect results with precise cooking methods, including Sous Vide and Crisp Regenerate, via the large 6.8” touchscreen
- Simple maintenance with a Dry Cycle to remove moisture inside the oven after steaming
- Multi-Functional Air Fry Tray and full-extension sliding shelf for greater flexibility and easy handling
- With Wi-Fi and the SmartHQ™ app, you can remotely monitor cooking progress and control key functions

DIMENSIONS

Height	18 "
Width	23 7/16 "
Depth	22 1/4 "

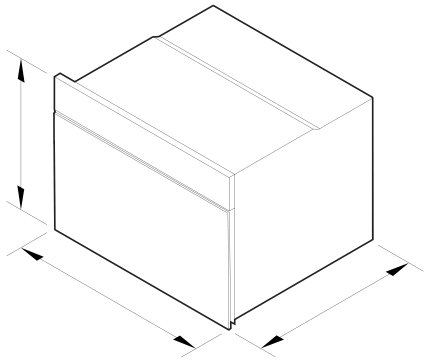

FEATURES & BENEFITS

Exceptional Performance

Offering Steam, Convection, or a combination of both, this oven provides exceptional versatility for every cooking style. Guided by a deep understanding of the science of cooking, we've mastered the balance of heat, humidity and airflow to deliver precise cooking methods, from Sous Vide to Crisp Regenerate, that bring out the full potential of every ingredient. The compact 55L capacity, three shelf positions, and full-extension sliding shelf make family feasts and entertaining effortless, while ActiveVent™ manages humidity for consistently perfect dishes every time.

Enhance Flavour, Preserve Nutrients

Cooking with Steam creates a gentle, precisely controlled environment that preserves delicate textures. With a generous 47 fl oz water tank, Salmon proteins stay relaxed, keeping fillets glossy and full of natural flavour, while the cell walls of Asparagus are softened just enough to retain a crisp bite and vibrant colour. To finish, Creme Caramel is surrounded with even heat for a smooth, silky texture and uniform colour.

Engineered for Life

Built for enduring performance, our Ovens undergo intensive testing equivalent to 7,300 hours or 20 years of real-world use, delivering durability you can rely on.

Considered Design

Every detail of our Minimal style appliances has been meticulously designed. With a black glass finish, handleless design, hidden water tank, and intuitive 6.8" touchscreen, every element aligns beautifully. Create your ultimate kitchen solution with our range of ovens and companion products, creating a seamless and cohesive look when installed side by side or stacked, with perimeter gaps as small as 1/16". The perfect pairing of style and precision for your kitchen.

Mastery of Temperature

Whether you want to Steam Rice, Air Fry Chicken, or Sous Vide Lamb, each of our precise cooking methods has been carefully calibrated with the optimal combination of heat, temperature, and humidity to help preserve texture, retain nutrients, and enhance flavour. With additional guidance for using the Temperature Sensor, it brings true mastery of temperature to every dish.

Effortless Cleaning

With Steam Clean, gentle steam lifts away stubborn spills, while the Dry Cycle efficiently removes residual moisture, leaving the oven ready for your next dish.

Multi-functional Accessories

Thoughtfully designed accessories expand your cooking possibilities. Designed to fit seamlessly into the side ladders, each accessory sits securely in place for confident cooking. The Multi-Functional Air Fry Tray promotes even airflow for crisp, golden results, while three Steam Dishes cater for everything from delicate vegetables to steaming full meals. The Roasting Dish works seamlessly with your oven, while the Wired Temperature Sensor helps achieve precise cooking results by monitoring food temperature in real time.

Connect and Control

Connected cooking brings intelligence and ease to your kitchen. With Wi-Fi and the SmartHQ™ app, you can monitor and control your oven remotely, receive real time notifications, and access helpful guidance. Software updates are delivered through the app to keep your appliance current with the latest features and functionality. Voice control with Google Assistant offers hands free convenience, while our temperature sensors support precise, confident cooking.

SPECIFICATIONS

Accessories (included)

Descale solution	2 sachets, Part 580925
Full extension sliding shelves	1
Handleless door key	1
Large steam dish	1
Multi-functional Air fry tray	1
Perforated large steam dish	1
Perforated small steam dish	1
Roasting dish	1
Wire shelf	1
Wired temperature sensor	1

Capacity

Total capacity	1.9 cu ft
Usable capacity	1.6 cu ft
Water tank capacity	47

Cleaning

Acid resistant graphite enamel	•
Descale cycle	•
Drying cycle	•
Removable oven door	•
Removable side ladders	•
Removable water tank	•
Steam clean (oven)	•

Connected Features

Alerts and notifications	•
Education and onboarding	•
Monitoring	•
Remote operation	•
Software updates	•

Consumption

Energy usage	211kWh/year
In-use energy carbon emissions estimate	26.7kgCO2e/year

Controls

Adjustable audio and display settings	•
Audio feedback	•
Automatic cooking/minute timer	•
Automatic pre-set temperatures	•
Celsius/Fahrenheit temperature	•
Delay start	•
Electronic oven control	•
Guided touchscreen cooking	•
Handle-free design	•
Interface type	6.8" touchscreen
Internal Light	•
Intuitive touchscreen display	•
Multi-language display	true
Sabbath mode with Star K certification	•
Smart appliance	•
Soft close doors	•
Voice control	•
Wireless temperature sensor compatible	•

Functions

Aero Broil	•
Aero™ Bake	•
Air fry	•
Bake	•
Classic bake	•
Classic fan	•
Crisp regenerate	•
Eco slow cook	•
Maxi Broil	•
Number of functions	19
Roast	•
Slow cook	•
Sous vide	•
Steam	•
Steam regenerate	•
True Aero	•
True Aero + High steam	•
True Aero + Low steam	•

True Aero + Medium steam	•
Vent bake	•

Performance

ActiveVent™ system	•
AeroTech™ technology	•
Automatic rapid pre-heat	•
Broil power	3000 W
Method Cooking	•
Steam Assist	•
SteamTechnology	•
Temperature range	95°F - 445°F

Power requirements

Connection type	Hard-wired
Dedicated circuit	20 A
Rated power	3200 / 4200 W
Supply frequency	60 Hz
Supply voltage	208 / 240 V

Product dimensions

Depth	22 1/4 "
Height	18 "
Width	23 7/16 "

Safety

Control panel key lock	•

SKU 85822

The product dimensions and specifications in this page apply to the specific product and model. Under our policy of continuous improvement, these dimensions and specifications may change at any time. You should therefore check with Fisher & Paykel's Customer Care Centre to ensure this page correctly describes the model currently available. © Fisher & Paykel Appliances Ltd 2020

Other product downloads available at fisherpaykel.com

- DWG
- DXF
- Care & Maintenance (English)
- Care & Maintenance (Canadian French)
- Care & Maintenance (Spanish)
- Energy Label (English and Canadian French)
- First Use (English)
- First Use (Canadian French)
- First Use (Spanish)
- Installation Considerations (English, Canadian French, Spanish)
- Installation Guide (English)
- Installation Guide (Spanish)
- Installation Guide (Canadian French)
- Planning Guide - 24" Series 9 & 11 Minimal Handleless (English)
- Planning Guide - 24" Series 9 & 11 Minimal Handleless (Canadian French)
- Planning Guide - 24" Series 9 & 11 Minimal Handleless (Spanish)
- California Warning Proposition 65 (English, Spanish, Canadian French, Chinese)
- Revit
- Rhino
- Safety & Warnings (English, Canadian French, Spanish)
- Sketchup

Where applicable:

All appliances use energy, and energy usage typically generates carbon emissions. **Fisher & Paykel Appliances' In-use Energy Carbon Emissions Estimate** indicates carbon emissions from a product's in-use energy. This is calculated either annually or per cycle, using the product's market-specific energy label energy consumption data multiplied by the carbon emissions factor for energy in your country or region.

Our In-use Energy Carbon Emissions Estimate is designed to assist customers in making informed purchasing decisions when comparing different Fisher & Paykel products. For example, a heat pump dryer typically has a lower In-use Energy Carbon Emissions Estimate than a vented dryer.

24/7

A PEACE OF MIND SALE
24 Hours 7 Days a Week Customer Support

T 1.888.936.7872 Wwww.fisherpaykel.com