9kg Series 11 Display-free Heat Pump Dryer, Steam Care

Series 11 | Heat Pump

White



Care for every corner of the wardrobe with a connected fabric care ecosystem. With 25+ cycles, this display-free Heat Pump Dryer combines with our Steam Care washer and Fabric Care Cabinet to create an ultimate fabric care solution.

- Combine with a Front Loader Washing Machine and Fabric Care Cabinet to create an ultimate fabric care ecosystem
- 25+ fabric care cycles including four specialised steam cycles
- TangleProtect technology reduces clothes tangling and ensures even drying
- Wi-Fi enabled – connects with the Haier Smart Home app for remote control, notifications, scheduled starts, voice commands and more

DIMENSIONS

Height	850 mm
Width	600 mm
Depth	655 mm

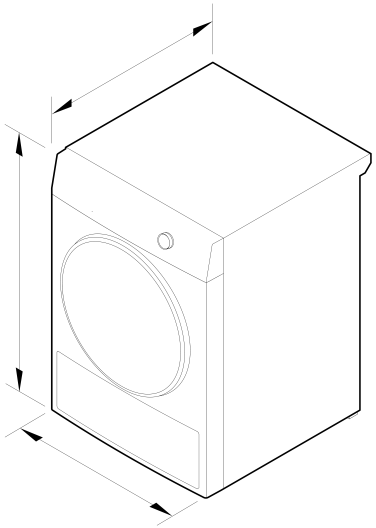

FEATURES & BENEFITS

Ultimate Fabric Care Solutions

Care for every corner of the wardrobe with an ecosystem of fabric care products, including our Heat Pump Dryer, Front Loader Washing Machine and Fabric Care Cabinet. From precision sensing to autonomous technologies, the fabric care suite removes the guesswork, delivering the perfect balance across each product to ensure optimal care for every garment.

Care For Every Fabric

With 25+ drying cycles including Activewear, Wool, Sports and Ultra Delicate, designed to care for every type of fabric. Select the cycle that best suits your load, from delicates to bulky items, to confidently dry your clothes.

Dewrinkle, Deodorise, Detangle

Our steam cycles are perfect for occasions where clothes have been worn once and need freshening up. With four specialised cycles for Shirts, Mixed, Delicates, and Sanitise, you can select the right refresh option for your fabric type. Use steam to quickly refresh and revive garments, leaving them dewrinkled, deodorised and ready to wear.

A Connected Solution

Choose from 25+ dry cycles with real-time updates and helpful prompts, thanks to the intuitive touchscreen display and push-to-select dial. Integrate your laundry system to seamlessly program and manage both your washing machine and our display-free heat pump dryer from a single point of control.

A Perfect 10

This Steam Care dryer uses heat pump technology to gently and effectively dry clothes at low temperatures. With a 10 star energy rating, you can dry with confidence.

Designed To Match

Our display-free Heat Pump Dryer is designed to match our Steam Care washing machine and Fabric Care Cabinet, giving you the design freedom to create a cohesive fabric care ecosystem. With multiple configurations from compact to large, this modular solution is designed to work for many spaces within the architecture of the evolving home.

Heat Pump Technology

Heat pump technology dries at lower temperatures for gentle fabric care and because moisture is condensed, no venting is required. This is an ideal dryer for laundries where venting is difficult as it can be placed almost anywhere in the home.

SPECIFICATIONS

Capacity

Total capacity	9 kg

Consumption

Energy rating	Grade 1

Controls

Adjustable alert beeps	•
Adjustable audio and display settings	•
Control Type	Controlled by Front load washer
Electronic clock	•
Screen brightness settings	•

Dry Cycles

Activewear	•
Bulky	true
Cool air	•
Cottons	•
Delicate	•
Denim	•
Easy Iron	•
Heavy	•
Mixed	•
Number of cycles	25
Outdoor	•
Rack dry	•
Sanitise	•
Sheets	•
Silk	•
Sneakers	•
Soft toys	•
Sports	•
Synthetics	•
Towels	•
Ultra delicate	•
Wool	•

Features

Clean condenser filter reminder	•
Clean door lint filter reminder	•
Damp dry signal	•
Drain Hose	true
Drum light	•
Drying rack	•
Easy access lint filter	•
Easy clean condenser filter	•
Eco mode	•
Enabled for downloadable cycles	•
End of cycle signal	•
Keylock	•
No external venting	•
Progress indicator	•
Quiet mode	•
Regular software updates	•
Reversible door	•
Speed mode	•
Stainless steel drum	•
Time to go	•
Water supply	Cold
Wi-Fi capable	•
Woolmark certified	•
Wrinkle free option	•

Performance

Auto sensing	•
Compressor type	Variable speed
Delay start	true
Dryness settings	5
Heat pump technology	•
Optimise Dry	Quiet, Speed, Eco
Reverse tumbling	Full reverse tumbling
Steam Care	•
TangleProtect	•
Time dry	30

Product dimensions

Depth	655 mm
Height	850 mm
Width	600 mm

Refresh By Steam

Delicate Refresh	•
Mixed Refresh	•
Sanitise Refresh	•
Shirts Refresh	•

SKU	95226

The product dimensions and specifications in this page apply to the specific product and model. Under our policy of continuous improvement, these dimensions and specifications may change at any time. You should therefore check with Fisher & Paykel's Customer Care Centre to ensure this page correctly describes the model currently available. © Fisher & Paykel Appliances Ltd 2020

Other product downloads available at fisherpaykel.com

DXF

- DWG
- Installation Guide (English)
- Installation Guide - Side by Side (English)
- Installation Guide - Stacked (English)
- Installation Guide (Chinese)
- Installation Guide - Side by Side (Chinese)
- Installation Guide - Stacked (Chinese)
- Planning Guide (English)
- Planning Guide (Chinese)
- Revit
- Rhino
- Restriction of the Use of Hazardous Substances (Chinese)
- SketchUp
- User Guide - Multi-Product Setup (English)
- User Guide - Multi-Product Setup (Chinese)

Where applicable:

All appliances use energy, and energy usage typically generates carbon emissions. **Fisher & Paykel Appliances' In-use Energy Carbon Emissions Estimate** indicates carbon emissions from a product's in-use energy. This is calculated either annually or per cycle, using the product's market-specific energy label energy consumption data multiplied by the carbon emissions factor for energy in your country or region.

Our In-use Energy Carbon Emissions Estimate is designed to assist customers in making informed purchasing decisions when comparing different Fisher & Paykel products. For example, a heat pump dryer typically has a lower In-use Energy Carbon Emissions Estimate than a vented dryer.