# 60cm Series 11 Minimal Handleless Pyrolytic Oven

Series 11 | Minimal

Black Glass




This refined handleless oven with pyrolytic cleaning features a large 6.8” touchscreen and method-led cooking for perfect results.

- Create perfect results with precise cooking methods, including Air Fry and Slow Cook, via the large 6.8” touchscreen
- Multi-Functional Air Fry Tray and two full-extension sliding shelves for greater flexibility and safer handling
- Moisture control and even heat distribution thanks to ActiveVent™ and AeroTech™ technology
- Monitor cooking progress remotely with Wi-Fi and Haier Smart Home app

## DIMENSIONS

| | |
|---|---|
| Height | 598 mm |
| Width | 596 mm |
| Depth | 565 mm |

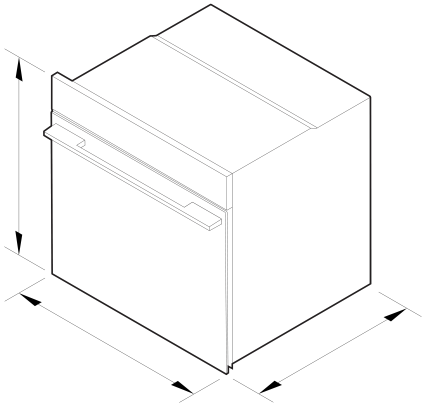

## FEATURES & BENEFITS

### Exceptional Performance

Experience unmatched performance and effortless convenience with precise cooking methods and pyrolytic cleaning. Guided by a deep understanding of the science of cooking, we've mastered the balance of heat, humidity and airflow to deliver precise cooking methods, from Air Fry to Slow Cook, that bring out the full potential of every ingredient. With ActiveVent™ technology to manage humidity levels, you can expect consistently perfect results on every shelf.

### Engineered for Life

Built for enduring performance, our Ovens undergo intensive testing equivalent to 7,300 hours or 20 years of real-world use, delivering durability you can rely on.

### Mastery of Temperature

Whether you want to Proof Bread, Roast Chicken or Bake Pastry, each of our precise cooking methods has been carefully calibrated with the optimal combination of heat, temperature, and humidity to help preserve texture, retain nutrients, and enhance flavour. With additional guidance for multi-shelf cooking and the Temperature Sensor, it brings true mastery of temperature to every dish.

### Considered Design

Every detail of our Minimal style appliances has been meticulously designed. With a black glass finish, handleless design, and intuitive 6.8" touchscreen, every element aligns beautifully. Create your ultimate kitchen solution with our range of ovens and companion products, creating a seamless and cohesive look when installed side by side or stacked, with perimeter gaps as small as 2mm. The perfect pairing of style and precision for your kitchen.

### Generous Capacity

An expansive 85L capacity provides plenty of room for all your dishes, whether it's everyday meals, family feasts, or entertaining a crowd. The full-extension, non-tip shelves glide effortlessly, making it simple and safe to remove hot dishes.

### Effortless Cleaning

For effortless wipe-downs, pyrolytic cleaning uses very high temperatures to turn residues into fine ash. The redesigned door showcases remarkable engineering, a gentle push lifts the glass out smoothly, making deep cleaning simple and satisfying.

### Multi-functional Accessories

Thoughtfully designed accessories expand your cooking possibilities. Designed to fit seamlessly into the side ladders, each accessory sits securely in place for confident cooking. The Multi-Functional Air Fry Tray promotes even airflow for crisp, golden results, while the Baking Tray and Roasting Dish provide versatile options that work seamlessly with your oven. The Wired Temperature Sensor helps achieve precise cooking results by monitoring food temperature in real time.

### Connect and Control

Connected cooking brings intelligence and ease to your kitchen. With Wi-Fi and the Haier Smart Home app, you can monitor and control your oven remotely, receive real time notifications, and access helpful guidance. Voice control with Xiao You offers hands free convenience simply speak to a connected device to open the door. For precise and confident cooking, our temperature sensors provide guidance to help you achieve perfect results.

## SPECIFICATIONS

### Accessories (included)

| | |
|---|---|
| Flat brushed baking tray | 1 |
| Full extension sliding shelves | 2 |
| Handleless door key | 1 |
| Multi-functional Air fry tray | 1 |
| Roasting dish | 1 |
| Wired temperature sensor | 1 |

### Capacity

| | |
|---|---|
| Shelf positions | 6 |
| Total capacity | 85 L |
| Usable capacity | 72 L |

### Cleaning

| | |
|---|---|
| Acid resistant graphite enamel | • |
| Pyrolytic self-clean | • |
| Removable oven door | • |
| Removable oven door inner glass | • |
| Removable side ladders | • |

### Connected Features

| | |
|---|---|
| Alerts and notifications | • |
| Education and onboarding | • |
| Monitoring | • |
| Remote operation | • |
| Software updates | • |

### Controls

| | |
|---|---|
| Adjustable audio and display settings | • |
| Audio feedback | • |
| Automatic cooking/minute timer | • |
| Automatic pre-set temperatures | • |
| Celsius/Fahrenheit temperature | • |
| Delay start | • |
| Electronic oven control | • |
| Guided touchscreen cooking | • |
| Handle-free design | • |
| Interface type | 6.8" touchscreen |
| Internal Light | • |
| Intuitive touchscreen display | • |
| Multi-language display | true |
| Smart appliance | • |
| Soft close doors | • |
| Wireless temperature sensor compatible | • |

### Functions

| | |
|---|---|
| Air fry | • |
| Bake | • |
| Classic bake | • |
| Classic fan | • |
| Dehydrate | • |
| Eco slow cook | • |
| Fan bake | • |
| Fan forced | • |
| Fan grill | • |
| Grill | • |
| Number of functions | 14 |
| Roast | • |
| Slow cook | • |
| Vent bake | • |

### Performance

| | |
|---|---|
| ActiveVent™ system | • |
| AeroTech™ technology | • |
| Automatic rapid pre-heat | • |
| Grill power | 3000 W |
| Method Cooking | • |
| Temperature range | 35C - 280C |

### Power requirements

| | |
|---|---|
| Connection type | Flex cord |
| Dedicated circuit | 16 A |
| Power cord length | 1.5m |
| Rated power | 2800-3300 W |
| Supply frequency | 50 Hz |
| Supply voltage | 220-240 V |

### Product dimensions

| | |
|---|---|
| Depth | 565 mm |
| Height | 598 mm |
| Width | 596 mm |

### Safety

| | |
|---|---|
| Control panel key lock | • |

| | |
|---|---|
| SKU | 85828 |

The product dimensions and specifications in this page apply to the specific product and model. Under our policy of continuous improvement, these dimensions and specifications may change at any time. You should therefore check with Fisher & Paykel's Customer Care Centre to ensure this page correctly describes the model currently available. © Fisher & Paykel Appliances Ltd 2020

All appliances use energy, and energy usage typically generates carbon emissions. **Fisher & Paykel Appliances' In-use Energy Carbon Emissions Estimate** indicates carbon emissions from a product's in-use energy. This is calculated either annually or per cycle, using the product's market-specific energy label energy consumption data multiplied by the carbon emissions factor for energy in your country or region.

Our In-use Energy Carbon Emissions Estimate is designed to assist customers in making informed purchasing decisions when comparing different Fisher & Paykel products. For example, a heat pump dryer typically has a lower In-use Energy Carbon Emissions Estimate than a vented dryer.

**Other product downloads available at fisherpaykel.com**

- DWG
- DXF
- Care & Maintenance (English)
- Care & Maintenance (Chinese)
- First Use (English)
- First Use (Chinese)
- Installation Considerations (English, Chinese)
- Installation Guide (English)
- Installation Guide (Chinese)
- Planning Guide - 60cm Series 9 & 11 Minimal Handleless (English)
- Planning Guide - 60cm Series 9 & 11 Minimal Handleless (English)
- Planning Guide - 60cm Series 9 & 11 Minimal Handleless (Chinese)
- Revit
- Rhino
- Restriction of the Use of Hazardous Substances (Chinese)
- Safety & Warnings (English)
- Safety & Warnings (Chinese)
- Sketchup

**Where applicable:**