Integrated Column Freezer, 30″, Ice

Series 11 | Integrated

Install it separately or pair with another Column for seamless integration – this model is right hinge with brushed steel interior.

DIMENSIONS

Height	**84**
Width	**29 3/4**
Depth	**24**

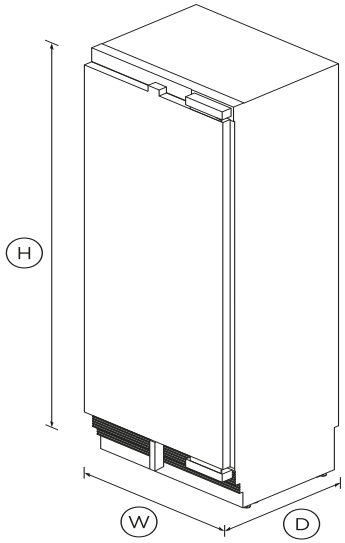

SPECIFICATIONS

Accessories (sold separately)

Door panel stainless steel	**24972**
Joiner kit	**24985**
Matching Replacement Water	**847200**
Toe kick stainless steel 30″	**25392**
Toe kick stainless steel 48″	**25396**
Toe kick stainless steel 54″	**25398**
Toe kick stainless steel 60″	**25400**

Features

Adjustable door shelves	**4**
Adjustable glass cantilevered	**3**
SmartTouch interface at	•
Water Filter	**847200**

Freezer Features

Automatic ice maker	•
Bottle chill	•
Door alarm	•
Fast freeze	•
Freezer bins	**4**
Ice Boost	•
LED bin lighting	•
LED ceiling lighting	•
LED side lighting	•

Performance

ActiveSmart™ Foodcare	•
ActiveSmart™ technology	•
Adaptive defrost	•
Dual evaporator	•
Frost free	•
Frost free freezer	•
Inverter controlled compressor	•
Sabbath mode	•
Variable food modes	**Soft freeze; Freeze; Deep**

Power requirements

Rated current	**10A**
Supply frequency	**60Hz**
Supply voltage	**115V**

Product dimensions

Depth	**24**
Depth (less door)	**24"**
Height	**84**
Width	**29 $^{3}/_{4}$**

Product information

Packaged weight	**309lbs**
Unpackaged weight	**294lbs**

Warranty

Sealed system parts and labor	**additional 3 years**

SKU	25593

The product dimensions and specifications in this page apply to the specific product and model. Under our policy of continuous improvement, these dimensions and specifications may change at any time. You should therefore check with Fisher & Paykel's Customer Care Centre to ensure this page correctly describes the model currently available. ? Fisher & Paykel Appliances Ltd 2020

24/7

A PEACE OF MIND SALE

24 Hours 7 Days a Week Customer Support

T 1.888.936.7872 **W**www.fisherpaykel.com