12kg Series 11 Contemporary Front Loader Washer, FlexiDose

Series 11 | Front Load

Graphite



A premium Front Loader Washer delivering tailored care for every fabric and load. The glass control panel with vibrant 7” touchscreen and intelligent sensing ensures each cycle is gentle, precise and reliably effective.

- Optimal care for 15 fibre types, including Ramie and Hemp
- Vibrant 7" touchscreen for intuitive cycle selection
- 5 stain treatments carefully fine-tuned for 3 different fibre types
- Detect load size, soil level, and colour with multi-sensory intelligence
- Connect SmartHQ™ for real-time updates, expert guides, extra functions and software updates

DIMENSIONS

Height	850 mm
Width	602 mm
Depth	661 mm

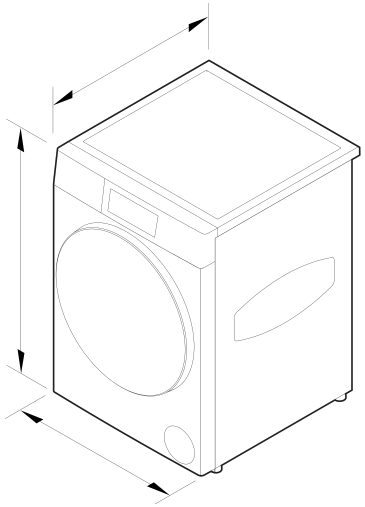

FEATURES & BENEFITS

OPTIMAL CARE FOR LUXURY FIBRES

Fisher & Paykel Series 11 Washers are the pinnacle of fabric care, turning every wash into a celebration of your finest fabrics. From the soft luxury of Cashmere scarves to the breathable comfort of Hemp trousers, or the flowing elegance of a Lyocell dress - each fibre is nurtured with precision, guided by the vivid 7" touchscreen. Intelligent technology accounts for the moisture absorption and fibre construction of each garment, adjusting temperature, speed, drum movement and detergent to deliver a perfectly balanced clean while extending the life of your garments.

ULTIMATE FABRIC CARE SOLUTIONS

Our most perfect pair yet, reimagined for modern living. A concealed handle, large glass door, machined control panel, and refined materials create a purity of form that balances luxury with lasting quality. A seamless glass fascia, push-to-open dispenser, and angled 7” touchscreen deliver intuitive control and integration with cabinetry, whether stacked or side by side. Designed to complement in both form and function, our Front Loader Washer, Display-Free Heat Pump Dryer, and Fabric Care Cabinet bring visual harmony to the home, with the Dryer seamlessly controlled via the Washer’s touchscreen.

INTELLIGENT COLOUR SENSING

Protect the vibrancy of Denim, Linen, and Silk with our advanced Colour Sensing. The system quickly distinguishes darks from whites, enabling tailored wash cycles with specific temperature profiles for each fibre. This reduces colour fading and preserves the brightness, depth, and richness of your garments for longer.

TAILORED STAIN CARE

Stains behave differently depending on the fibre they’re on — Butter should be washed in a solid state to prevent it from sinking into the pores of the fibre, while Tea, Coffee, and Red Wine cling more strongly to Cotton than Polyester. Our 5 Stain Treatments for 3 fibre types provide pre- or in-wash care tailored to both fibre and stain, lifting marks effectively while protecting the life and quality of your garments.

CUSTOMISED AUTO DOSE, IDEAL FOR SILK

Everyday routines are simpler when the details are taken care of for you with Auto Dose. ActiveIntelligence™ senses load size and soil level, Auto Dose delivers the right amount of detergent, and Active Mix blends it with water for a gentle, effective wash. Two FlexiDose reservoirs let you use detergent and softener, storing enough for up to 21 washes when both are used for detergent, or specialised formulas — ideal for Silk, with it's delicate protein fibres that weaken when wet and need extra care to maintain softness and sheen.

REFRESH WITH STEAM

Gently relax fibres to reduce wrinkles and odours with Steam Refresh. Perfect for a Hemp shirt or trousers, it smooths creases and restores the fabric's natural shape. With a naturally rigid structure and high lignin content, Hemp fibres resist deep creasing and rebound effectively when steamed, leaving garments smooth, soft, and refreshed — without the need for a full wash.

CLASS-LEADING EFFICIENCY

Designed to reduce running costs and environmental impact with 5-star energy and 5-star water ratings, you can trust that your fabric care routine is both effective and sustainable. The SmartDrive™ motor ensures quiet operation and long-lasting reliability, with fewer moving parts for reduced wear over time.

SPECIFICATIONS

Capacity

Capacity	12 kg

Connected Features

Alerts and notifications	•
Education and onboarding	•
Initial software update for full feature set	•
Monitoring	•
Remote operation	•
Software updates	•

Consumption

Energy rating	5 star
Energy usage	275kWh/year
In-use energy carbon emissions estimate	24.8kgCO2e/year
Rated capacity (AU NZ only)	12
Water consumption per cycle	86L
Water rating	5 star (WELS)

Controls

Adjustable audio and display settings	•
Interface type	7" touchscreen
Screen brightness settings	•
Two button start compliant	•

Features

Active Mix	•
Add a garment (immediate door opening)	•
Advanced out of balance detection	•
Anti-Bacteria Treatment (ABT)	•
Anti-fungal door gasket	•
Auto out of balance correction	•
Automatic water level	•
Controlled cold	•
Crease Free	•
Delay start	•
Detergent dispenser	Flexi Dose
Drum dry	•
Excess suds detection	•
Extra large door	•
Extra Rinse	•
Fabric softener dispenser	Auto Dose
Favourite mode	Multiple
Flood protection	•
Front and back levelling feet	•
Interior light	•
Keylock	•
Optimise Wash	•
Pre Wash Cold	•
Pre Wash Warm	•
Progress indicator	•
Push to open dispenser	•
Quiet mode	•
Reverse tumbling	Full reverse tumbling
Smart appliance	•
Soak	•
Stainless steel drum	•
Time saver function	•
Time to go	•
Water supply	Hot & Cold

Performance

ActiveIntelligence™ technology	•
Auto colour sensing	•
Auto load sensing	•
Auto soil sensing	•
Maximum spin speed	1400 rpm
Motor type	Direct Drive
Number of spin speeds	5
SmartDrive™ technology	•
Vortex wash	•

Product dimensions

Depth	661 mm
Height	850 mm

Width	602 mm

SKU	92320

The product dimensions and specifications in this page apply to the specific product and model. Under our policy of continuous improvement, these dimensions and specifications may change at any time. You should therefore check with Fisher & Paykel's Customer Care Centre to ensure this page correctly describes the model currently available. © Fisher & Paykel Appliances Ltd 2020

Other product downloads available at fisherpaykel.com

- DWG
- DXF
- Energy Label
- Installation Guide - Side by Side (English)
- Installation Guide - Stacked (English)
- Installation Guide (English)
- Planning Guide - Fabric Care Solutions (English)
- Revit
- Rhino
- Introducing Fabric Care Solutions (English)
- Sketchup
- User Guide (English)
- User Guide - Multiple Product Setup (English)

Where applicable:

All appliances use energy, and energy usage typically generates carbon emissions. **Fisher & Paykel Appliances' In-use Energy Carbon Emissions Estimate** indicates carbon emissions from a product's in-use energy. This is calculated either annually or per cycle, using the product's market-specific energy label energy consumption data multiplied by the carbon emissions factor for energy in your country or region.

Our In-use Energy Carbon Emissions Estimate is designed to assist customers in making informed purchasing decisions when comparing different Fisher & Paykel products. For example, a heat pump dryer typically has a lower In-use Energy Carbon Emissions Estimate than a vented dryer.

24/7

A PEACE OF MIND SALE
24 Hours 7 Days a Week Customer Support

T 0800 372 273 Wwww.fisherpaykel.com