Series 11, Professional Tall Single DishDrawer Dishwasher

Series 11 | Professional

Stainless Steel



Place anywhere in your kitchen at bench height for easy loading and minimal bending. Features a premium stainless steel interior and distinctive Professional styling

- Eight wash cycles from Heavy to Light, including Auto, 60min and Glassware
- Fits full-size dinner plates up to 12 1/4 inches, with flexible racking for large cookware
- Wi-Fi capability and a SmartHQ™ app for remote control and notifications

DIMENSIONS

Height	17 13/16 "
Width	23 9/16 "
Depth	22 9/16 "

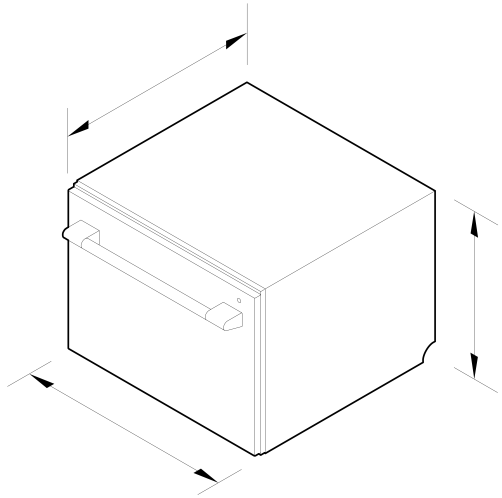

FEATURES & BENEFITS

Ease Of Use

DishDrawer™ Dishwashers are beautiful to use with soft-close drawers, and can be conveniently positioned at bench height for ease of loading and minimal bending. Flexible racking includes height-adjustable cup racks and wine glass supports.

Complementary Design

With distinctive, bold styling, this DishDrawer™ Dishwasher is designed to match the Fisher & Paykel Professional style family of appliances.

Flexible Wash Options

Eight wash programs including Auto, 60min and Glassware, while modifiers such as Sanitize, Dry+ and Quiet provide added wash flexibility. The Quiet wash modifier reduces the noise on some cycles while maintaining performance – perfect for late night washing.

Design Quality

Every detail has been carefully crafted using quality materials, from the easy-to-clean stainless steel interior to the spray arm sensor that detects jams for increased wash confidence.

Quiet Performer

Running at a low decibel rating of 43dBA, these DishDrawer™ Dishwashers do their job without making a fuss. The combination of intelligent technology and simple mechanics means greater reliability and excellent wash performance.

Efficient Performance

Our Energy Star rated DishDrawer™ Dishwashers use the energy they need without compromising on wash performance.

SPECIFICATIONS

Accessories (included)

Cutlery basket	•
Knife clip and multipurpose clip	•

Capacity and loading

Accommodates round plates up to	12.25"
Adjustable height, foldable cupracks	•
Fold down tines	•
Pitch adjustable tines	•
Place settings	7
Place settings	7
Wine glass supports with stemware grippers	•

Connected Features

Alerts and notifications	•
Education and onboarding	•
Monitoring	•
Software updates	•

Consumption

Energy rating	Energy Star
Energy usage	125kWh/year
In-use energy carbon emissions estimate	44.1kgCO2e/year
Water usage (per wash cycle)	1.7 gal

Controls

Electronic fault/Diagnostic indicator	•
End of cycle beeps	•
Energy saving delay start option of up to 12 hours	•
Internal wash selector	•
Keylock	•
Rinse aid indicator light	•
Smart appliance	•
Spray arm sensing	•

Features

Fan assisted drying	•
Flood protection	•
Flow through detergent dispenser	•
Internal tub material	Stainless Steel
Motor type	BLDC
Quiet operation	•
SmartDrive™ technology	•
Soft close drawer	•

Performance

Noise emissions	43 dBA

Power Requirements

Dedicated Circuit (A)	5A
Supply frequency	60 Hz
Voltage	110 - 120V

Product Dimensions

Depth	22 9/16 "
Height	17 13/16 "
Width	23 9/16 "

Wash Program Modifiers

Dry +	•
Quiet	•
Sanitise	•
Wash modifiers	3

Wash Programs

60 min	•
Auto	•
Eco	•
Glassware	•
Heavy	•
Light	•
Medium	•
Rinse	•
Wash programs	8

Water connection

Inlet water temperature	140 °F
Supplied hose to suit 3/8" (9mm) male compression fitting	•
Water pressure	30kPa - 1000 kPa
Water supply	3/8" to suit Male Compression Fitting

SKU 82398

The product dimensions and specifications in this page apply to the specific product and model. Under our policy of continuous improvement, these dimensions and specifications may change at any time. You should therefore check with Fisher & Paykel's Customer Care Centre to ensure this page correctly describes the model currently available. © Fisher & Paykel Appliances Ltd 2020

Other product downloads available at fisherpaykel.com

- DXF
- Archicad
- Data Sheet (English)
- DWG
- Energy Label (English, Canadian French)
- First Use (English)
- First Use (English)
- First Use (Spanish)
- First Use (Spanish)
- First Use (Canadian French)
- First Use (Canadian French)
- Installation Guide (English)

- Installation Guide (English)
- Installation Guide (Canadian French)
- California Warning Proposition 65 (English, Spanish, Canadian French, Chinese)
- Revit
- Rhino
- Right To Repair Declaration (English, Canadian French)
- Safety & Warnings (English)
- Safety & Warnings (Spanish)
- Safety & Warnings (Canadian French)
- SketchUp
- User Guide (English)
- User Guide (Canadian French)
- Wash Program Data (English)

Where applicable:

All appliances use energy, and energy usage typically generates carbon emissions. **Fisher & Paykel Appliances' In-use Energy Carbon Emissions Estimate** indicates carbon emissions from a product's in-use energy. This is calculated either annually or per cycle, using the product's market-specific energy label energy consumption data multiplied by the carbon emissions factor for energy in your country or region.

Our In-use Energy Carbon Emissions Estimate is designed to assist customers in making informed purchasing decisions when comparing different Fisher & Paykel products. For example, a heat pump dryer typically has a lower In-use Energy Carbon Emissions Estimate than a vented dryer.

24/7

A PEACE OF MIND SALE
24 Hours 7 Days a Week Customer Support

T 1.888.936.7872 **W**www.fisherpaykel.com