60cm Series 9 Minimal Handleless Compact Combi-Steam Oven

Minimal

With its sleek handleless design and slim profile, our compact Combination Steam Oven is designed to be the cornerstone of any kitchen, ensuring versatile placement.

- Handleless oven design ensures smooth, uninterrupted lines in your kitchen cabinetry for a cohesive look
- 23 oven functions including Steam, Sous Vide, Air Fry and Crisp Regenerate
- Guided touchscreen cooking makes it simple to cook by food, function or recipe
- Designed to pair with companion products such as vacuum seal drawers

DIMENSIONS

Height	**458 mm**
Width	**596 mm**
Depth	**565 mm**

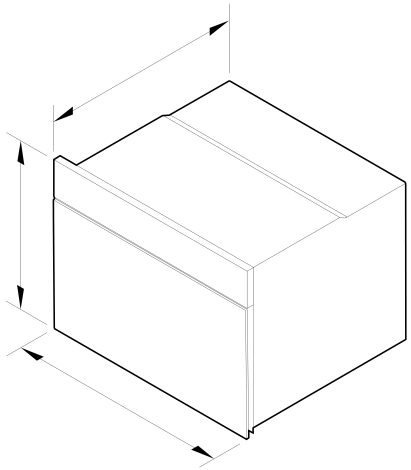

FEATURES & BENEFITS

Handleless Design

Effortlessly open and close your oven with a gentle press of a button, ensuring convenience and smooth operation in the kitchen. Moving away from traditional oven doors, this model is an ideal match for kitchens with a continuous, handle-free design, ensuring a seamless flow across the cabinetry.

Cook With Confidence

Using the large 5″ touchscreen you can select a cooking method or hero ingredient and your oven will provide heat type and temperature recommendations for perfect results. For added versatility, you can also select your go-to cooking functions.

Sized To Suit

The compact height of this combi steam oven allows for versatile placement. You have the flexibility to install at a convenient height to suit your kitchen design and preference.

Mastery Of Temperature

Steam enhances the transfer of heat, and when combined with convection it delivers exceptional texture and optimises browning, creating perfect results from everyday meals to signature creations.

Preserve Flavour And Nutrients

Perfect for delicate dishes like snapper or salmon, steam cooking preserves nutrients and texture, offering a healthier way to enjoy meals. With specialised steam functions, including Sous Vide, the combi steam oven brings out the best in every ingredient, ensuring your creations are both nutritious and delicious.

Reheat And Restore

Give your leftovers a new life with our Steam Regenerate function, ensuring meals like roast chicken and risotto retain freshness and flavour. For that just-baked quality in pastries, bread, and pizza, use Crisp Regenerate for the perfect reheat that keeps every bite deliciously crispy.

Hands-Free Control

Experience the ultimate kitchen convenience with the SmartHQ™ app's voice-activated oven door. Connect your SmartHQ™ account with Google's voice assistant for hands-free control—simply speak to a compatible device* to open your oven door. Multitasking in the kitchen has never been so effortless.
*Device must be compatible with the Google Home app.

SPECIFICATIONS

Accessories (included)

Chromed shelf runners	•
Descale solution	2
Flat brushed baking tray	1
Grill rack	1 set
Large steam dish	1
Perforated large steam dish	1
Perforated small steam dish	1
Roasting dish	1
Wire shelf	1
Wired temperature sensor	1

Capacity

Shelf positions	4
Total capacity	55 L
Usable capacity	45 L
Water tank capacity	1.4L

Cleaning

Acid resistant graphite enamel	•
Descale cycle	•
Drying cycle	•
Easy to clean interior	•
Removable oven door	•
Removable oven door inner glass	•
Removable side ladders	•
Removable water tank	•
Steam clean (oven)	•

Consumption

Energy rating	A+

Controls

Adjustable audio and display settings	•
Audio feedback	•
Automatic cooking/minute timer	•
Automatic pre-set temperatures	•
Celsius/Fahrenheit temperature	•
Delay start	•
Electronic capacitive touch controls	•
Electronic oven control	•
Guided cooking by food type and recipes	•
Handle-free design	•
Internal Light	•
Multi-language display	true
Smart appliance	•
Soft close doors	•
Temperature sensor	•
Touch control glass interface	•
True convection oven	•
Voice control	•
Wireless temperature sensor compatible	•

Functions

Air fry	•
Bake	•
Classic bake	•
Crisp regenerate	•
Fan bake	•
Fan forced	•
Fan forced + High steam	•
Fan forced + Low steam	•
Fan forced + Medium steam	•
Fan grill	•
Grill	•
Pastry Bake	•
Pizza bake	•
Roast	•
Slow cook	•
Sous vide	•
Steam	•
Steam clean (oven)	•
Steam defrost	•
Steam proof	•
Steam regenerate	•
Vent bake	•
Warm	•

Performance

AeroTech™ technology	•
Automatic rapid pre-heat	•
Temperature range	**35 - 230**

Power requirements

Amperage	**20 A**
Supply frequency	**50 Hz**
Supply voltage	**220-240 V**

Product dimensions

Depth	**565 mm**
Height	**458 mm**
Width	**596 mm**

SKU	82598

The product dimensions and specifications in this page apply to the specific product and model. Under our policy of continuous improvement, these dimensions and specifications may change at any time. You should therefore check with Fisher & Paykel's Customer Care Centre to ensure this page correctly describes the model currently available. © Fisher & Paykel Appliances Ltd 2020

Other product downloads available at fisherpaykel.com

- DWG
- DXF
- Declaration of Conformity (English)
- Energy Label
- Planning Guide - Handleless Ovens and Companions (English)
- Product Information Sheet
- Revit
- Rhino
- SketchUp
- User Guide (English)

Where applicable:

All appliances use energy, and energy usage typically generates carbon emissions. **Fisher & Paykel Appliances' In-use Energy Carbon Emissions Estimate** indicates carbon emissions from a product's in-use energy. This is calculated either annually or per cycle, using the product's market-specific energy label energy consumption data multiplied by the carbon emissions factor for energy in your country or region.

Our In-use Energy Carbon Emissions Estimate is designed to assist customers in making informed purchasing decisions when comparing different Fisher & Paykel products. For example, a heat pump dryer typically has a lower In-use Energy Carbon Emissions Estimate than a vented dryer.

24/7

A PEACE OF MIND SALE

24 Hours 7 Days a Week Customer Support

T 08000 886 605 **W**www.fisherpaykel.com