Freestanding Quad Door Refrigerator Freezer, 90.5cm, 690L, Ice & Water

Series 7 | Contemporary

Our largest capacity Quad Door model has ample storage space and Variable Temperature Zone technology, with an elegant black glass finish.

- Elegant matte black glass finish, with recessed handles for a streamlined look
- Extra large capacity, with Variable Temperature Zone technology for optimal food storage
- ActiveSmart™ technology helps keep food fresher for longer by constantly maintaining the ideal temperature
- Convenient access to fresh, chilled water and ice with slimline water dispenser and internal ice maker

DIMENSIONS

Height	**1900mm**
Width	**905mm**
Depth	**748mm**

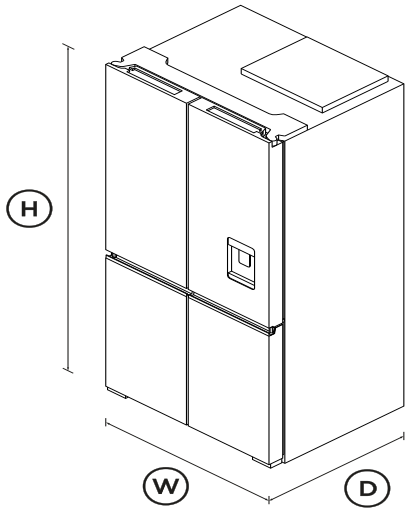

FEATURES & BENEFITS

VARIABLE TEMPERATURE ZONE

When it comes to optimal food preservation, one temperature does not fit all. Variable Temperature Zones give you full control over the way you care for food. At the touch of a button, easily convert the lower right compartment to Freezer, Soft Freeze, Chill or Fridge mode, to best suit different types of food. Adjust zones for maximum every day convenience, or change modes to provide additional chilling capacity for special occasions.

CHILL MODE

Keep ready-to-eat food fresher for longer with Chill Mode (-1.5 to 0°C). Chill Mode is a perfect solution for everyday life. It keeps meats, poultry and fish as cool as possible, retaining vital freshness and helps food retain its condition for around three times longer than Fridge Mode. It's also great for entertaining. Set a zone to Chill Mode to quickly bring beverages down to serving temperature.

ACTIVESMART™ FOODCARE

ActiveSmart™ Foodcare learns how you live. It is technology which understands how you use your refrigeratorand adjusts temperature, airflow and humidity inside to help keep food fresher for longer.

SOFT FREEZE MODE

Soft freeze (-10 to -6°C) is perfect for food that will be consumed soon – but not right away. Set a zone to Soft Freeze Mode and enjoy optimal food storage and everyday convenience. Soft frozen food requires only a quick thaw rather than a full defrost. It is the ideal setting for easy portioning, such as cut loaves of bread, soups and even cured meats, or for serving straight from the compartment.

CONSIDERED DESIGN

Designed to match our Contemporary style black glass family of products, this refrigerator freezer has a tactile black glass finish that pairs perfectly with recessed handles.

DESIGN QUALITY

Our refrigerators are designed and built using robust, quality materials, with stainless steel exteriors and solid glass for the interior shelving.

ICE MAKER

Fresh ice is always available for you in a dedicated freezer bin. Simply turn it off when you need to free up freezer space, or during busy times, use the boost feature to increase ice production.

SPECIFICATIONS

Accessories (sold separately)

Water filter replacement	**847200 - FWC3**

Capacity

Volume	**690L**
Volume freezer	**118L**
Volume refrigerator	**453L**
Volume variable temperature	**119L**

Consumption

Energy rating	**3 star**
Energy usage	**587kWh/year**
In-use energy carbon	**79.5kgCO2e/year**

Features

Adjustable door shelves	**6**
Adjustable glass shelves	**2**
Door alarm	•
Front levelling feet	•
Fruit and vegetable bins	**3**
Full extension runners	•
LED lighting	•
Rear rollers	•
SmartTouch control panel	•
Ultra slim water dispenser	•

Freezer Features

Automatic ice maker	•
Bottle chill	•
Door alarm	•
Fast freeze	•
Full extension clear bins	**1**
Ice Boost	•
Ice bin and scoop	•
LED lighting	•

Performance

ActiveSmart™ Foodcare	•
Frost free freezer	•
Humidity control system	•
Internal replaceable water filter	•
Inverter controlled compressor	•
R600a refrigerant	•
Sabbath mode	•
Variable food modes	**Fridge, Chill, Soft freeze,**
Variable temperature	•

Power requirements

Rated current	**1.8A**
Supply voltage	**220 - 240V**

Product dimensions

Depth	**748mm**
Height	**1900mm**
Height to top of cabinet	**1867mm**
Height to top of door	**1900mm**
Width	**905mm**

Warranty

Parts and labour	**2 years**

SKU	26081

The product dimensions and specifications in this page apply to the specific product and model. Under our policy of continuous improvement, these dimensions and specifications may change at any time. You should therefore check with Fisher & Paykel's Customer Care Centre to ensure this page correctly describes the model currently available. ? Fisher & Paykel Appliances Ltd 2020

24/7

A PEACE OF MIND SALE

24 Hours 7 Days a Week Customer Support

T 0800 372 273 **W**www.fisherpaykel.com