39cm Series 11 Auxiliary Teppanyaki Cooktop

Series 11 | Minimal

Stainless Steel



Create the ultimate culinary solution. Designed to pair with our Primary Modular Induction Cooktop, this versatile teppanyaki cooktop is your ideal companion for grilling, frying, and sautéing to perfection.

- Part of our unique modular cooking solution. Pair with a primary cooktop for a unified cooking experience
- Temperature control from 80°C to 220°C for gentle warming to grilling
- Turn cooking into an engaging experience – directly prepare dishes on the surface
- Even heat that adjusts swiftly for consistent cooking with any ingredient

DIMENSIONS

Height	74 mm
Width	385 mm
Depth	530 mm

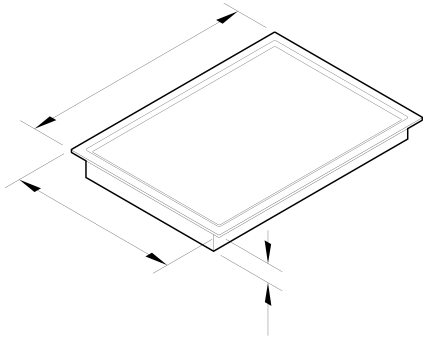

FEATURES & BENEFITS

Modular Design Freedom

The teppanyaki cooktop is a dynamic addition to the Fisher & Paykel modular series. Seamlessly integrate this module with other Fisher & Paykel modular cooktops and ventilation solutions, positioning them to suit your patterns of use, for a kitchen environment truly tailored to your lifestyle.

Complementary Design

Elevate your kitchen's aesthetic with the teppan. Designed to complement our modular cooktops in both design and functionality, it promises a unified cooking experience. Its sleek and compact design, along with flush installation, seamlessly integrates into any contemporary kitchen space.

Mastery Of Temperature

The teppan provides an expansive temperature range to suit a variety of cooking methods. It can heat to a gentle 80°C, ideal for delicate warming, rise to a moderate 100-150°C, suited for slow cooking, reach 160-200°C, perfect for pan-frying and sautéeing favourites like pancakes, halloumi, chicken, and veggies, and even achieve an optimal 200-220°C for grilling.

Even Heat, Every Time

Experience consistent and even heat distribution with the teppan. Whether you're crisping cold salmon from the fridge or sautéing room-temperature mushrooms, once you set your desired cooking temperature, the teppan maintains that surface temperature consistently – even as you add ingredients.

Interactive Dining

Experience authentic Teppanyaki dining at home with the teppan. Transform your cooking into a shared and interactive experience, making it perfect for entertaining. Imagine the sizzle of shrimp, the tenderness of grilled chicken fillets, and the vibrancy of vegetables – all coming to life directly on the surface, without the need for pots or pans.

SPECIFICATIONS

Consumption

In-use energy carbon emissions estimate	0.0kgCO2e/year

Controls

Modular compatibility	Auxiliary

Features

Modular design	•

Performance

Induction cooking technology	•
Zone bridging	•

Power requirements

Connection	Power cord, stripped ends, 1 N
Service	12 A
Supply	220-240 V, 50 Hz / 60 Hz

Product dimensions

Depth	530 mm
Height	74 mm
Width	385 mm

Safety

Surface hot indicators	•

Zone ratings

Front	1400 W
Rear	1400 W

Zones

Number of zones	2

SKU	82817

The product dimensions and specifications in this page apply to the specific product and model. Under our policy of continuous improvement, these dimensions and specifications may change at any time. You should therefore check with Fisher & Paykel's Customer Care Centre to ensure this page correctly describes the model currently available. © Fisher & Paykel Appliances Ltd 2020

Other product downloads available at fisherpaykel.com

- DXF
- DWG
- Energy Label
- Installation Guide (English)
- Installation Guide (Chinese)
- Planning Guide (English)
- Planning Guide (Chinese)
- Rhino
- Restriction of the Use of Hazardous Substances (Chinese)
- SketchUp
- User Guide - Multiple Product Setup (English)
- User Guide - Primary Induction Modular Cooktop (English)
- User Guide - Multiple Product Setup (Chinese)
- User Guide - Primary Induction Modular Cooktop (Chinese)

Where applicable:

All appliances use energy, and energy usage typically generates carbon emissions. **Fisher & Paykel Appliances' In-use Energy Carbon Emissions Estimate** indicates carbon emissions from a product's in-use energy. This is calculated either annually or per cycle, using the product's market-specific energy label energy consumption data multiplied by the carbon emissions factor for energy in your country or region.

Our In-use Energy Carbon Emissions Estimate is designed to assist customers in making informed purchasing decisions when comparing different Fisher & Paykel products. For example, a heat pump dryer typically has a lower In-use Energy Carbon Emissions Estimate than a vented dryer.