90cm Series 7 Box Chimney Wall Rangehood

Series 7 | Contemporary

Stainless Steel and Glass



Engineered for optimum extraction of fumes, smoke and vapour. The powerful fan removes cooking odours and grease from the kitchen quietly and efficiently.

- Variable fan speed, for more flexibility in selecting the perfect extraction rate for your cooking
- Exceptionally powerful maximum air movement of 1020m³/hr
- 4 energy-efficient LED lights to illuminate your cooking surface
- Grease management system

DIMENSIONS

Height	625 - 930 mm
Width	895 mm
Depth	535 mm

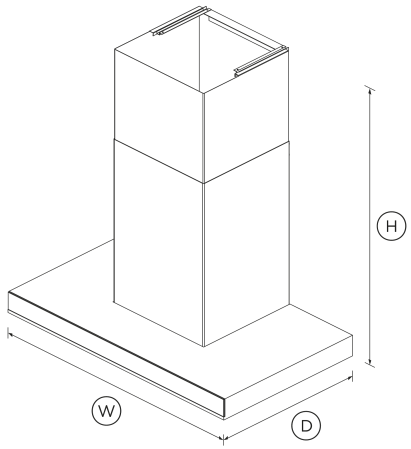

SPECIFICATIONS

Accessories (sold separately)

Chimney extension	792492
Ducting solution	•

Fan ratings

Maximum air movement	1080 m³/hr
Maximum sound rating	68 dBA

Installation and cleaning

Ducted	Top extraction
Two piece height adjustable flue	•

Performance

Extraction type	Surface
Fan speeds	Variable

Power requirements

Lighting power	2 W
Motor power	150 W
Total Power	158 W

Product dimensions

Depth	535 mm
Height	625 - 930 mm
Width	895 mm

Ventilation features

Light type	LED

SKU	81336

The product dimensions and specifications in this page apply to the specific product and model. Under our policy of continuous improvement, these dimensions and specifications may change at any time. You should therefore check with Fisher & Paykel's Customer Care Centre to ensure this page correctly describes the model currently available. © Fisher & Paykel Appliances Ltd 2020

Other product downloads available at fisherpaykel.com

- DXF
- Archicad
- DWG
- Revit
- Rhino
- Restriction of the Use of Hazardous Substances (Chinese)
- SketchUp
- Installation & User Guide (English, Chinese)

Where applicable:

All appliances use energy, and energy usage typically generates carbon emissions. **Fisher & Paykel Appliances' In-use Energy Carbon Emissions Estimate** indicates carbon emissions from a product's in-use energy. This is calculated either annually or per cycle, using the product's market-specific energy label energy consumption data multiplied by the carbon emissions factor for energy in your country or region.

Our In-use Energy Carbon Emissions Estimate is designed to assist customers in making informed purchasing decisions when comparing different Fisher & Paykel products. For example, a heat pump dryer typically has a lower In-use Energy Carbon Emissions Estimate than a vented dryer.