Integrated Column Freezer, 76cm, Ice

Series 11 | Integrated

Panel Ready | Left hinge

Install it separately or pair with another Column for true design freedom – this model is left hinge with stainless steel interior.

- ActiveSmart™ technology helps keep food fresher for longer by constantly maintaining the ideal temperature.
- Variable Temperature Zone lets you change a compartment to Freeze, Soft Freeze or Deep Freeze for optimal storage
- Internal ice maker with boost for busy times
- Customise with your own kitchen cabinetry or purchase our stainless steel door panel accessory

DIMENSIONS

Height	**2134mm**
Width	**756mm**
Depth	**610mm**

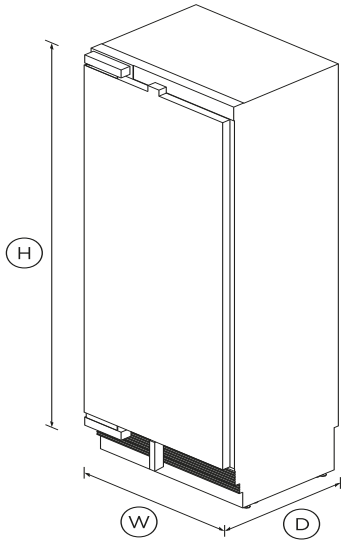

FEATURES & BENEFITS

Mix & match
Integrated Column Refrigeration gives you the freedom to mix and match. Different sized Column Refrigerators and Freezers can be installed separately or paired. Finish them with our stainless steel door panels or customise to match your own kitchen cabinetry.

Perfect fit
These models fit flush, with only 3mm gaps around them and no visible hinges or grilles. Our Integrated Column models can be seamlessly hidden behind your cabinetry, or you can purchase our stainless steel door panel.

Clever energy
Our ActiveSmart™ Foodcare Refrigerator Freezers adapt to daily use by cooling and defrosting only when needed. This means your refrigerator uses the energy it needs without compromising on food care.

Appealing illumination
Bright LEDs light up each ceiling, shelves, bins and trays in both refrigerator and freezer, making it easy to find your food and creating a welcoming glow in your kitchen for those midnight snacks.

Design quality
The premium design and quality finish includes a stainless steel interior lining as well as full-extension metal shelf runners for easy access, and robust glass shelving.

Easy install
Integrated Column Refrigerators and Freezers have been developed to make their installation easy. The joiner kit is included when pairing refrigerators and freezers. All models come with front adjustable levelling feet and they've been designed to easily slide into place as separate units.

SPECIFICATIONS

Accessories

1372mm Stainless steel toe kick	**AKRS13710**
1524mm Stainless steel toe	**AKRS15210**
1981mm Stainless steel toe kick	**AKRS19810**
2134mm Stainless steel toe	**AKRS21310**
762mm Stainless steel toe kick	**AKRS7610**
Contemporary round handle	**AHS-RD21**
Contemporary square handle	**AHD3-RD21**
Joiner kit	**AJ-RS21LR**

Matching Replacement Water	**FWC3**
Square fine aluminium handle	**AHD5RDSF**
Square fine black handle kit	**AHD5RDSFB**
Stainless steel door panel	**RD7621L10D**
Stainless steel door panel	**RD7621R10D**

Capacity

Total net volume	**393L**
Volume freezer	**442L**

Freezer Features

Automatic ice maker	•
Bottle chill	•
Door alarm	•
Fast freeze	•
Freezer bins	**4**
Ice Boost	•
LED bin lighting	•
LED ceiling lighting	•
LED side lighting	•
SmartTouch interface at	•

Installation Dimensions

Cabinetry height with included	**2134mm**
Minimum inside width of	**762mm**
Minimum internal depth of	**635mm**
Minimum internal height of	**2134mm**

Performance

ActiveSmart™ Foodcare	•
Adaptive defrost	•
Dual evaporator	•
Frost free	•
Frost free freezer	•
Inverter controlled compressor	•
Noise emissions	**42dBA**
Noise emissions class	**D**
Sabbath mode	•
Variable food modes	**Soft freeze; Freeze; Deep**
Variable temperature zones	**2**

Power requirements

Rated current	**10A**
Supply frequency	**50Hz**
Supply voltage	**230V**

Product dimensions

Depth	**610mm**
Height	**2134mm**
Width	**756mm**

Warranty

Parts and labour	**2 years**
Sealed system parts only	**additional 3 years**

SKU	25761

The product dimensions and specifications in this page apply to the specific product and model. Under our policy of continuous improvement, these dimensions and specifications may change at any time. You should therefore check with Fisher & Paykel's Customer Care Centre to ensure this page correctly describes the model currently available. ? Fisher & Paykel Appliances Ltd 2020

A PEACE OF MIND SALE

24 Hours 7 Days a Week Customer Support

T +65 6741 0777 **W**www.fisherpaykel.com