60cm Series 7 Minimal Combi-Steam Oven

Series 7 | Minimal

Black Glass



With its refined Minimal design, this Combi-Steam oven offers steam cooking, convection cooking, or a combination of both - with method-led cooking.

- Create perfect results with precise cooking methods, including Sous Vide and Crisp Regenerate, via the 5” touchscreen
- Simple maintenance with a Dry Cycle to remove moisture inside the oven after steaming
- Generous 85L total capacity with 6 shelf positions
- Monitor cooking progress remotely with Wi-Fi and Haier Smart Home app

DIMENSIONS

Height	598 mm
Width	596 mm
Depth	565 mm

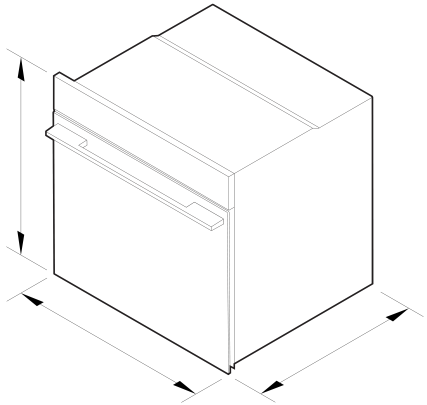

FEATURES & BENEFITS

Exceptional Performance

Offering Steam, Convection, or a combination of both, this oven provides exceptional versatility for every cooking style. Guided by a deep understanding of the Science of Cooking, we've mastered the balance of heat, humidity and airflow to deliver precise cooking methods, from Sous Vide to Crisp Regenerate, that bring out the full potential of every ingredient. With ActiveVent™ to manage humidity levels, it delivers consistently perfect results in every dish.

Engineered for Life

Built for enduring performance, our Ovens undergo intensive testing equivalent to 7,300 hours or 20 years of real-world use, delivering durability you can rely on.

Enhance Flavour, Preserve Nutrients

Cooking with Steam creates a gentle, precisely controlled environment that preserves delicate textures. For a main course that delights the senses, Snapper proteins stay relaxed, keeping fillets glossy and full of natural flavour, while the cell walls of Asparagus are softened just enough to retain a crisp bite and vibrant colour. To finish, Creme Caramel is surrounded with even heat for a smooth, silky texture and uniform colour.

Considered Design

Every detail of our Minimal style appliances has been meticulously designed. With a black glass finish, refined handle, easy to access steam tank, and intuitive 5" touchscreen, every element aligns beautifully. Create your ultimate kitchen solution with our range of ovens and companion products, creating a seamless and cohesive look when installed side by side or stacked, with perimeter gaps as small as 2mm. The perfect pairing of style and precision for your kitchen.

Mastery of Temperature

Whether you want to Steam Rice, Air Fry Chicken, or Sous Vide Lamb, each of our precise cooking methods has been carefully calibrated with the optimal combination of heat, temperature, and humidity to help preserve texture, retain nutrients, and enhance flavour. With additional guidance for using the Temperature Sensor, it brings true mastery of temperature to every dish.

Effortless Cleaning

With Steam Clean, gentle steam lifts away stubborn spills, while the Dry Cycle efficiently removes residual moisture, leaving the oven ready for your next dish.

Multi-functional Accessories

Thoughtfully designed accessories expand your cooking possibilities. Designed to fit seamlessly into the side ladders, each accessory sits securely in place for confident cooking. The Multi-Functional Air Fry Tray promotes even airflow for crisp, golden results, while three Steam Dishes cater for everything from delicate vegetables to full meals. The Baking Tray and Roasting Dish provide versatile options that work seamlessly with your oven, while the Wired Temperature Sensor helps achieve precise cooking results by monitoring food temperature in real time.

Connect and Control

Connected cooking brings intelligence and ease to your kitchen. With Wi-Fi and the Haier Smart Home app, you can monitor and control your oven remotely, receive real time notifications, and access helpful guidance. Voice control with Xiao You offers hands free convenience while our temperature sensors provide guidance to help you achieve perfect results.

SPECIFICATIONS

Accessories (included)

Descale solution	2 sachets, Part 580925
Flat brushed baking tray	1
Large steam dish	1
Multi-functional Air fry tray	1
Perforated large steam dish	1
Perforated small steam dish	1
Roasting dish	1
Telescopic sliding runners	1 set
Wire shelf	2
Wired temperature sensor	1

Capacity

Shelf positions	6
Total capacity	85 L
Usable capacity	72 L
Water tank capacity	670ml

Cleaning

Acid resistant graphite enamel	•
Descale cycle	•
Drying cycle	•
Removable oven door	•
Removable oven door inner glass	•
Removable side ladders	•
Removable water tank	•
Steam clean (oven)	•

Connected Features

Alerts and notifications	•
Education and onboarding	•
Monitoring	•
Remote operation	•
Software updates	•

Controls

Adjustable audio and display settings	•
Audio feedback	•
Automatic cooking/minute timer	•
Automatic pre-set temperatures	•
Celsius/Fahrenheit temperature	•
Delay start	•
Electronic oven control	•
Guided touchscreen cooking	•
Interface type	5" touchscreen
Internal Light	•
Intuitive touchscreen display	•
Multi-language display	true
Smart appliance	•
Soft close doors	•
Wireless temperature sensor compatible	•

Functions

Air fry	•
Bake	•
Classic bake	•
Classic fan	•
Crisp regenerate	•
Eco slow cook	•
Fan bake	•
Fan forced	•
Fan forced + High steam	•
Fan forced + Low steam	•
Fan forced + Medium steam	•
Fan grill	•
Grill	•
Number of functions	19
Roast	•
Slow cook	•
Sous vide	•
Steam	•
Steam regenerate	•
Vent bake	•

Performance

ActiveVent™ system	•
AeroTech™ technology	•
Automatic rapid pre-heat	•
Grill power	3000 W

Method Cooking	•
Steam Assist	•
SteamTechnology	•
Temperature range	35C - 230C

Power requirements

Connection type	Flex cord
Dedicated circuit	16 A
Power cord length	1.5m
Rated power	2800-3300 W
Supply frequency	50 Hz
Supply voltage	220-240 V

Product dimensions

Depth	565 mm
Height	598 mm
Width	596 mm

Safety

Control panel key lock	•

SKU	85883

The product dimensions and specifications in this page apply to the specific product and model. Under our policy of continuous improvement, these dimensions and specifications may change at any time. You should therefore check with Fisher & Paykel's Customer Care Centre to ensure this page correctly describes the model currently available. © Fisher & Paykel Appliances Ltd 2020

Other product downloads available at fisherpaykel.com

- DWG
- DXF
- Care & Maintenance (English)
- Care & Maintenance (Chinese)
- First Use (English)
- First Use (Chinese)
- Installation Considerations (English, Chinese)
- Installation Guide (English)
- Installation Guide (Chinese)
- Planning Guide - 60cm Series 7 & 9 Minimal (English)
- Planning Guide - 60cm Series 7 & 9 Minimal (Chinese)
- Revit
- Rhino
- Restriction of the Use of Hazardous Substances (Chinese)
- Safety & Warnings (English)
- Safety & Warnings (Chinese)
- Sketchup

Where applicable:

All appliances use energy, and energy usage typically generates carbon emissions. **Fisher & Paykel Appliances' In-use Energy Carbon Emissions Estimate** indicates carbon emissions from a product's in-use energy. This is calculated either annually or per cycle, using the product's market-specific energy label energy consumption data multiplied by the carbon emissions factor for energy in your country or region.

Our In-use Energy Carbon Emissions Estimate is designed to assist customers in making informed purchasing decisions when comparing different Fisher & Paykel products. For example, a heat pump dryer typically has a lower In-use Energy Carbon Emissions Estimate than a vented dryer.