# 90cm Series 5 5 Zone Induction Cooktop, SmartZone

Series 5 | Contemporary

Black Glass



This 90cm induction cooktop features a spacious 5-zone layout with SmartZone for larger cookware and Link Mode to connect compatible rangehood, combining flexibility and sleek design.

- Five versatile zones, with the option of pairing zones to create a larger SmartZone
- Use Link Mode to automatically activate your compatible rangehood as you cook
- Easily get started with guided setup and tips in the SmartHQ™ app
- Elevated design offers a sleek, modern look that enhances your kitchen's aesthetic

## DIMENSIONS

| | |
|---|---|
| Height | 61 mm |
| Width | 900 mm |
| Depth | 530 mm |

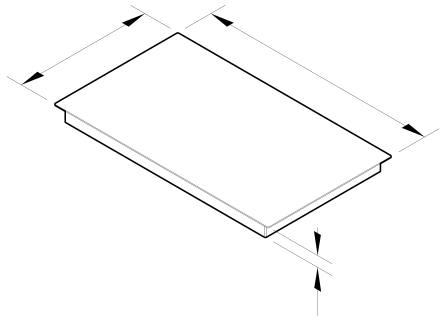

## FEATURES & BENEFITS

**Link Mode compatability**
Use Link Mode to automatically activate your compatible rangehood as you cook, creating an intuitive, hands-free experience in the kitchen.

**Guided setup with SmartHQ™**
SmartHQ™ provides step-by-step onboarding, helpful tips and setup guidance — right from your phone. Designed to support you beyond installation, the app helps you get familiar with your cooktop and explore its features at your own pace.

**SmartZone pairing**
SmartZone links two cooking zones and controls them as one, giving you the flexibility to cook with large pans, griddles, or ingredients like whole fish. By streamlining the cooking surface, SmartZone makes it easy to try new techniques and cookware.

**Five zones for flexible cooking**
With five cooking zones, including a central zone for larger cookware, this cooktop offers generous space and flexibility — ideal for preparing multiple dishes at once.

**Elevated design**
A sleek black glass surface, refined detailing, and an updated user interface combine to deliver a cooktop that looks as good as it performs. Designed for seamless integration, it brings a modern, intuitive touch to everyday cooking.

**Safer choice**
Induction cooktops heat only when cookware is detected on the ceramic surface. Features like keylock, safety timeout, hot surface indicators, and auto switch-off in case of spills help ensure a safer cooking environment for everyone.

**Easy cleaning**
Induction heats the cookware, not the surrounding surface, so spills are less likely to bake on. The durable ceramic glass cleans easily with a simple wipe after cooking.

## SPECIFICATIONS

**Cleaning**

| | |
|---|---|
| Easy clean cooktop design | • |

**Connected Features**

| | |
|---|---|
| Education and onboarding | • |

**Consumption**

| | |
|---|---|
| In-use energy carbon emissions estimate | 0.0kgCO2e/year |

### Controls

| | |
|---|---|
| Minute timer | • |
| Smart appliance | • |
| Touch and slide controls | • |

### Performance

| | |
|---|---|
| Gentle Heat | • |
| Induction cooking technology | • |
| Pause function | • |
| PowerBoost | • |
| SmartZone | • |

### Power requirements

| | |
|---|---|
| Service | 45A |
| Supply frequency | 50 Hz |
| Supply voltage | 220-240 V |

### Product dimensions

| | |
|---|---|
| Depth | 530 mm |
| Height | 61 mm |
| Width | 900 mm |

### Safety

| | |
|---|---|
| Keylock | • |
| Pan detection system | • |
| Spillage auto off | • |
| Surface hot indicators | • |

### Zone ratings

| | |
|---|---|
| Centre zone (PowerBoost set) | 2300 (3000) |
| Left front zone (PowerBoost set) | 2000 (2600) |
| Left rear zone (PowerBoost set) | 1500 (1800) |
| Right front zone (PowerBoost set) | 1500 (2000) |
| Right rear zone (PowerBoost set) | 2000 (2600) |
| SmartZone | 3500 W |

### Zones

| | |
|---|---|
| Number of zones | 5 |

| | |
|---|---|
| SKU | 84206 |

The product dimensions and specifications in this page apply to the specific product and model. Under our policy of continuous improvement, these dimensions and specifications may change at any time. You should therefore check with Fisher & Paykel's Customer Care Centre to ensure this page correctly describes the model currently available. © Fisher & Paykel Appliances Ltd 2020

**Other product downloads available at fisherpaykel.com**

- DXF
- DWG
- Installation Guide (English)
- Planning Guide (English)
- Revit
- Rhino
- SketchUp
- User Guide (English)

**Where applicable:**

All appliances use energy, and energy usage typically generates carbon emissions. **Fisher & Paykel Appliances' In-use Energy Carbon Emissions Estimate** indicates carbon emissions from a product's in-use energy. This is calculated either annually or per cycle, using the product's market-specific energy label energy consumption data multiplied by the carbon emissions factor for energy in your country or region.

Our In-use Energy Carbon Emissions Estimate is designed to assist customers in making informed purchasing decisions when comparing different Fisher & Paykel products. For example, a heat pump dryer typically has a lower In-use Energy Carbon Emissions Estimate than a vented dryer.

24/7

A PEACE OF MIND SALE
24 Hours 7 Days a Week Customer Support

T +65 6741 0777 Wwww.fisherpaykel.com