38 Bottles Series 7 Wine Cabinet

Series 7 | Contemporary

Stainless Steel



Designed to match our family of products, our stylish stainless steel wine cabinet provides a stable temperature and humidity for any varietal.

- 38 bottle capacity
- With dual temperature zones, to ensure you can perfectly store wines of all varieties
- Brushed metal handle and timeless stainless steel design

DIMENSIONS

Height	830 mm
Width	595 mm
Depth	580 mm

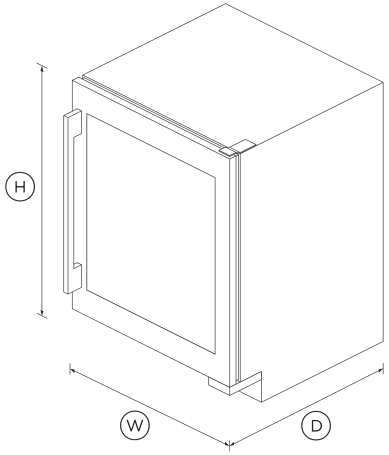

FEATURES & BENEFITS

Seamless Pairing

Our wine cabinets are designed to match the Fisher & Paykel family of products, with stylish brushed stainless steel and glass doors that complement any kitchen.

Total Control

Maintaining the perfect environment for your red and white wines is easy with dual zones in your wine cabinet. The control panel gives you the ability to set each zone to between 5°C and 20°C and to adjust LED lighting and fans.

Storage Perfected

The fan helps circulate air inside your wine cabinet while oak shelves and a low vibration compressor ensure optimal storage. The UV tempered glass door reduces the risk of external light affecting your wine.

Complete Visibility

Your wine collection is always on display through UV tempered glass with a demist function and LED lighting. Bottles nestle on stylish oak slide out shelves and a top shelf tilts so you can showcase your favourite wines.

SPECIFICATIONS

Capacity

Number of bottles	38

Features

Fixed shelves	3
LED lighting	•
Low vibration compressor	•
Power on/off control	•
Removable solid oak shelves	3
UV tempered glass door	•

Performance

Door lock	•
Dual Zone	•
Noise emissions	42 dBA
Noise emissions class	D
Temperature selectable 5-20°C	•
Touch sensitive control panel	•

Power requirements

Rated current	10 A
Supply frequency	230 Hz
Supply voltage	50 V

Product dimensions

Depth	580 mm
Height	830 mm
Width	595 mm

SKU	26559

The product dimensions and specifications in this page apply to the specific product and model. Under our policy of continuous improvement, these dimensions and specifications may change at any time. You should therefore check with Fisher & Paykel's Customer Care Centre to ensure this page correctly describes the model currently available. © Fisher & Paykel Appliances Ltd 2020

Other product downloads available at fisherpaykel.com

- Restriction of the Use of Hazardous Substances (Chinese)
- Installation & User Guide (English, Chinese)

Where applicable:

All appliances use energy, and energy usage typically generates carbon emissions. **Fisher & Paykel Appliances' In-use Energy Carbon Emissions Estimate** indicates carbon emissions from a product's in-use energy. This is calculated either annually or per cycle, using the product's market-specific energy label energy consumption data multiplied by the carbon emissions factor for energy in your country or region.

Our In-use Energy Carbon Emissions Estimate is designed to assist customers in making informed purchasing decisions when comparing different Fisher & Paykel products. For example, a heat pump dryer typically has a lower In-use Energy Carbon Emissions Estimate than a vented dryer.